BERNINA®

deco 330

IMPORTANT SAFETY INSTRUCTIONS

When using an electrical appliance, basic safety precautions should always be followed, including the following:

Read all instructions before using this embroidery computer.

When the embroidery computer is not in use, it should be disconnected from the electricity supply by removing the plug from the outlet.

DANGER

To reduce the risk of electrical shock:

1. An appliance should never be left unattended when plugged in.

2. Always unplug this embroidery computer from the electric outlet immediately after using and before cleaning.

3. Always unplug before replacing light bulb. Replace bulb with the same type rated 12 volts/5watt.

WARNING

To reduce the risk of burns, fire, electrical shock or injury to persons:

1. Do not allow to be used as a toy. Close attention is necessary when this embroidery computer is used by or near children and infirm persons.

2. Use this embroidery computer only for its intended use as described in this manual. Use only attachments recommended by the manufacturer as contained in this manual.

3. Never operate this embroidery computer if
   - it has a damaged cord or plug
   - it is not working properly
   - it has been dropped or damaged
   - it has fallen into water

   Return the embroidery computer to the nearest authorized BERNINA dealer or service center for examination, repair, electrical or mechanical adjustment.

4. Never operate the embroidery computer with any air openings blocked. Keep ventilation openings of the embroidery computer free from accumulation of lint, dust and loose cloth.

5. Keep fingers away from all moving parts. Special care is required around the sewing needle.

6. Always use the original BERNINA needle plate. The wrong plate can cause the needle to break.

8. Do not pull or push fabric while stitching. It may deflect the needle, causing it to break.

9. Turn power switch to «0» (off) when making any adjustments in the needle area, such as threading or changing the needle, threading the bobbin or changing the presser foot etc.

10. Always unplug the embroidery computer from the electrical outlet when removing covers, lubricating or when making any other user servicing adjustments mentioned in this instruction manual.

11. Never drop or insert any object into any opening.

12. Do not use outdoors.

13. Do not operate where aerosol (spray) products are being used or where oxygen is being administered.

14. To disconnect, turn all controls to the off («0») position then remove the plug from the outlet.

15. Do not unplug by pulling on the cord but grasp the plug before pulling.

16. No responsibility will be taken on behalf of **BERNINA** for any possible damage as the result of misuse of the sewing computer

17. This embroidery computer is provided with double insulation (except USA/ Canada). Use only identical replacement parts. See instructions for Servicing of double-insulated machines.

SERVICING DOUBLE-INSULATED PRODUCTS

Except USA/ Canada!
In a double-insulated product, two systems of insulation are provided instead of grounding. No grounding means is provided on a double-insulated product nor should a means for grounding be added to the product. Servicing a double-insulated product requires extreme care and knowledge of the system and should only be done by qualified service personnel. Replacement parts for a double-insulated product must be identical to those parts in the product. A double insulated product is marked with the words «DOUBLE INSULATION» or «DOUBLE INSULATED».

The symbol ⧈ may also be marked on the product.

This sewing and embroidery computer is intended for household use only.

SAVE THESE

Foreword

Congratulations on your decision to buy the BERNINA Deco 330. By owning this fascinating embroidery computer we hope you will spend countless hours enjoying the many features and high stitch quality that the Deco 330 provides.

At BERNINA we have combined all our experience when creating this new product, in order to keep you completely satisfied. New features like the large embroidery area as well as the concise, easy-to-learn user interface through the bright touch screen will help to enhance your creativity to new heights.

With a wide selection of available embroidery designs cards, educational publications and useful accessories we can support you even further. Please visit your BERNINA dealer; he will provide you with help, ideas and embroidery essentials, to make your sewing experience on the embroidery computer even more satisfactory.

We are happy, to welcome you in the BERNINA sewing family and we hope you will have a wonderful sewing experience with your Deco 330.

P.Horisberger, Productmanager

Fritz Gegauf Ltd. - BERNINA Sewing Machine Manufacturers - 8266 Steckborn / Switzerland

Important Safety Instructions	1
Foreword	2
Embroidery Computer Overview	4- 6
Getting Ready to Embroider	7- 18
Important Embroidery Information	19- 23
Key Operations	24- 33
Embroidery	34- 37
Lettering	38- 42
Editing and Combining Designs	43- 50
Design Cards and Compatibility	51- 54
Care and Maintenance	55- 56
Troubleshooting	57
Index	58
Built-in Design Chart	Appendix
Table of Preset Colours	Appendix

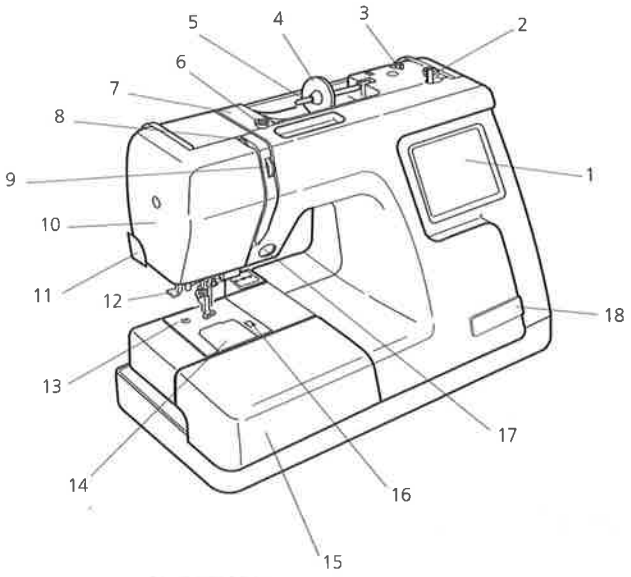

Name of Parts

1. LCD touch screen
2. Bobbin winder spindle
3. Bobbin thread cutter
4. Spool holder (large)
5. Spool pin
6. Bobbin winding thread guide
7. Thread guide
8. Thread take-up lever
9. Thread tension dial
10. Face plate
11. Thread cutter & thread holder
12. Needle threader
13. Needle plate
14. Hook cover plate
15. Extension table (accessory box)
16. Hook cover plate release button
17. Start/Stop button
18. Pocket for scissors

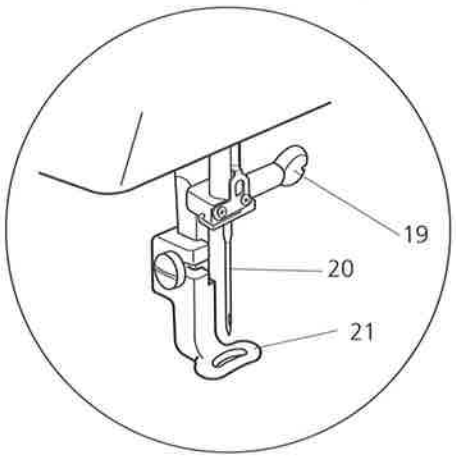

19. Needle clamp screw
20. Needle
21. Embroidery foot

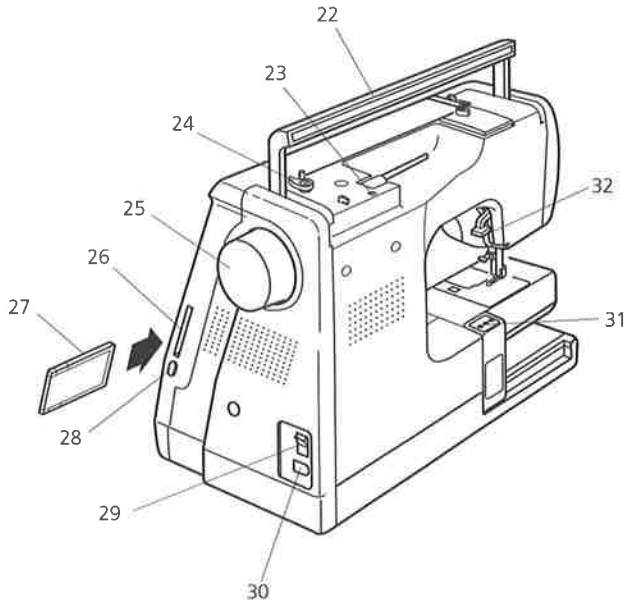

22. Carrying handle
23. Hole for extra spool pin
24. Bobbin winder stopper
25. Handwheel
26. Design Card slot
27. Design Card (optional accessory)
28. Card eject button
29. Power switch
30. Machine socket
31. Carriage (for embroidery)
32. Presser foot lifter

Standard accessories

1. Bobbins

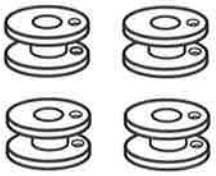

2. Lint Brush

3. Extra Spool Pin

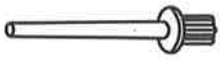

4. Spool Pin Felt

5. Spool Stand

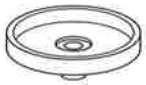

6. Spool Holder (Large)

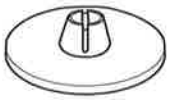

7. Spool Holder (Small)

8. Scissors

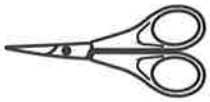

9. Screwdriver

10. Screwdriver

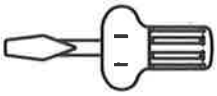

11. Set of Needles

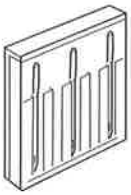

12. Instruction Book

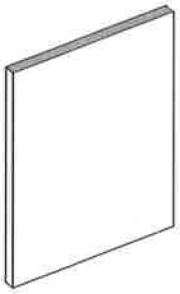

13. Power Supply Cord

14. Hoop A (with Template)

15. Hoop B (with Template)

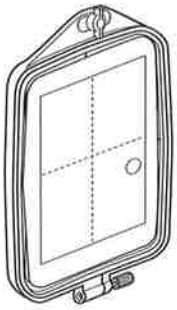

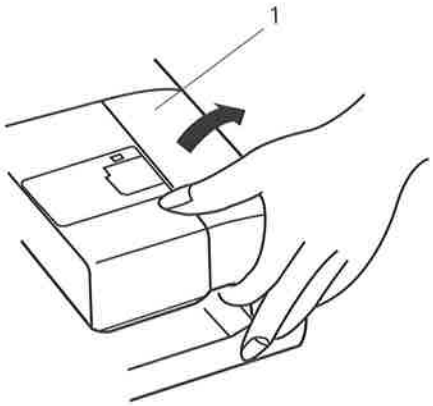

Detachable Extension Table
To remove, lift out the extension table toward you as illustrated.

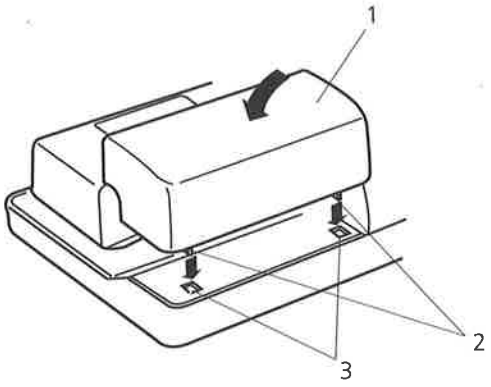

To attach, position the tabs on the base tab holes and push down gently.

1. Extension table
2. Tabs
3. Base tab holes

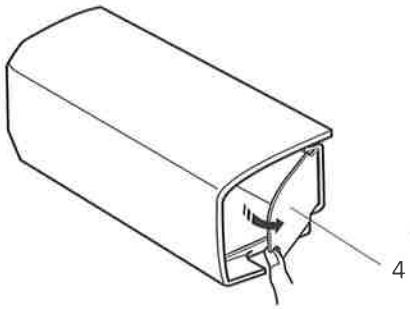

Sewing accessories are stored in the extension table. Pull open the door to store the accessories.

4. Door

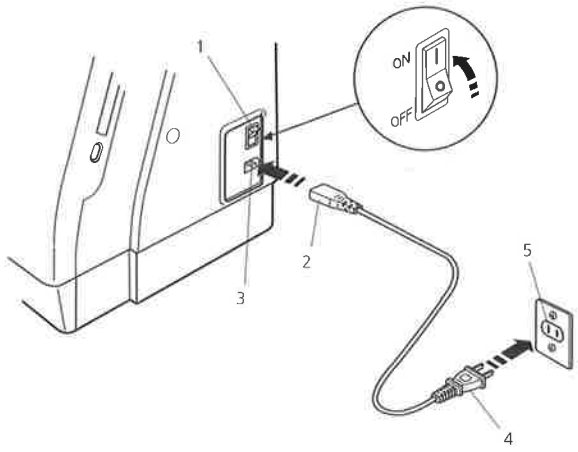

Connecting the Power Supply
The Deco 330 is equipped with an auto voltage system, which automatically adjusts the equipment to accept any local power supply voltage between 100 and 240V, 50/60 Hz.
Turn off the power switch and insert the machine plug into the machine.
Insert the power supply plug into the wall outlet and turn the power switch on.

1. Power switch
2. Machine plug
3. Machine socket
4. Power supply plug
5. Wall outlet

Note:
After turning on the power, it takes approximately six seconds for the pattern selection window to be displayed on the touch screen. (This is the required boot up time and is not a defect)

Operating Instructions:
The symbol 'O' indicates the 'off' position of the switch. For appliances with a polarized plug (one blade wider than the other). To reduce the risk of electric shock, this plug is intended to fit in a polarized outlet only one way. If it does not fit fully in the outlet, reverse the plug. If it still does not fit, contact a qualified electrician to install the proper outlet. Do not modify the plug in any way.

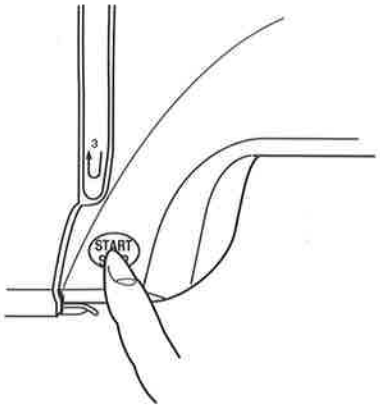

Start/ Stop Button
Press this button to start or to stop stitching.
The color of the button changes each time you press it- red when the machine is running, and green when it is stopped.

Note:
The Deco 330 is equipped with an automatic shutdown safety feature to prevent overheating when the machine is running overloaded. Follow safety instructions that appear on the visual touch screen if it happens.

For Your Safety:
While in operation, always keep your eyes on the embroidery area, and do not touch any moving parts such as the thread take-up lever, handwheel or needle. Always turn off the power switch and unplug the power supply:

- when leaving the machine unattended.
- when attaching or removing parts.
- cleaning the machine.

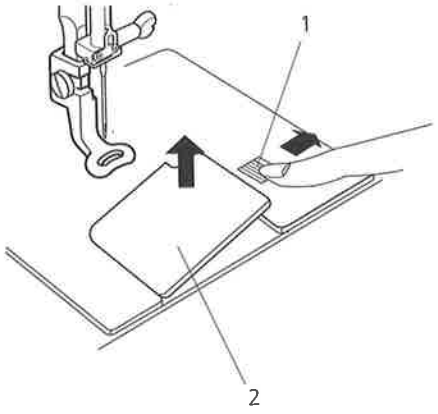

Removing the bobbin
Slide the hook cover plate release button to the right, and remove the hook cover plate. Lift out the bobbin from the bobbin holder.

1. Hook cover plate release button
2. Hook cover plate
3. Bobbin

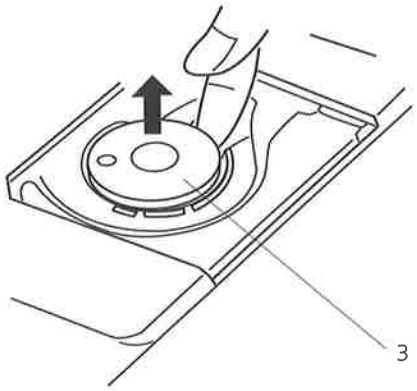

Setting the spool of thread
Place the spool of thread on the spool pin with the thread coming off the spool as shown. Attach the large spool holder, and press it firmly against the spool of thread.

4. Large spool holder

Note:
Use the small spool holder to hold narrow or small spools of thread.

5. Small spool holder

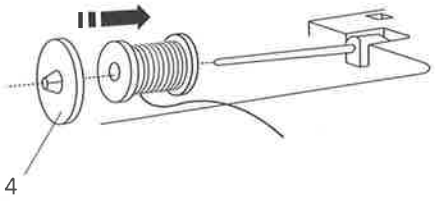

Use the spool stand if the thread tangles around the root of the spool pin

6. Spool stand

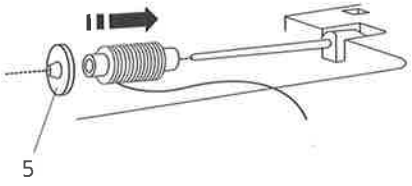

Extra spool pin
Use the extra spool pin when you need to wind the bobbin without unthreading the machine while working on the project. Insert the extra spool pin into the spool stand then into the hole beside the horizontal spool pin. Place a cushion felt and spool on the spool pin. The end of the thread should unwind as illustrated.

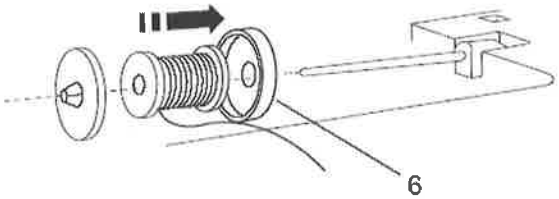

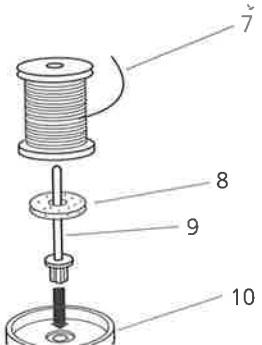

7. End of the thread
8. Cushion felt
9. Extra spool pin
10. Spool stand
11. Hole

To achieve the best embroidery quality, BERNINA recommends to use only high quality embroidery thread such as Mettler Metrosene+® Poly Sheen®, Isacord

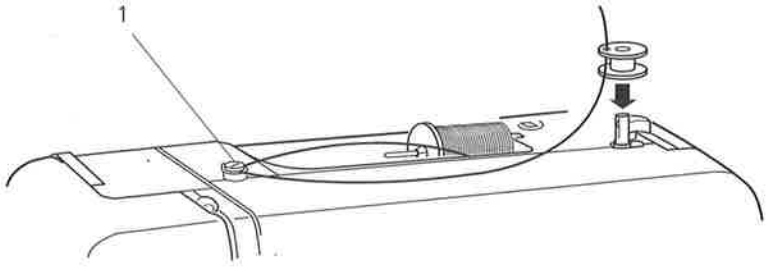

Winding the bobbin

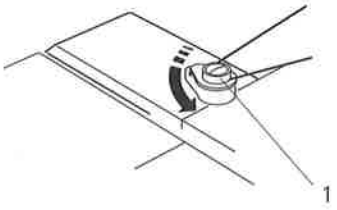

Guide the thread around the bobbin winder thread guide while holding the thread at the spool.

1. Bobbin winder thread guide

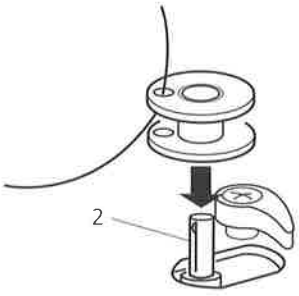

Thread through the hole in the bobbin from the inside to the outside. Put the bobbin on the bobbin winder spindle.

2 Bobbin winder spindle

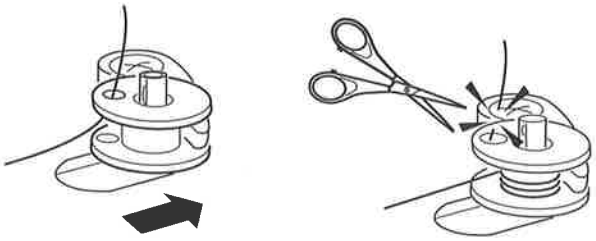

Push the spindle to the right. Press the Start/Stop button while holding the end of the thread. Stop the machine after the bobbin has made a few turns. Cut the thread close to the hole in the bobbin. Press the Start/Stop button again. When the bobbin is fully wound it will stop automatically. Press the Start/Stop button to stop the machine then return the bobbin winder spindle to the left. Remove the bobbin and cut the thread with the bobbin thread cutter.

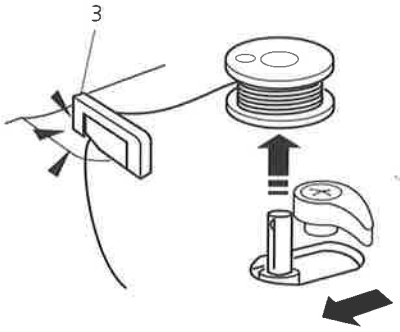

3. Bobbin thread cutter

Notes:
Do not move the bobbin winder spindle while the machine is running. For safety purposes, the motor will stop automatically after running for two minutes. Adjust how much the bobbin is filled by rotating the bobbin winder stopper.

To achieve the best embroidery quality, BERNINA recommends to use only high quality bobbin thread such as OESD 41ET/W or Mettler®

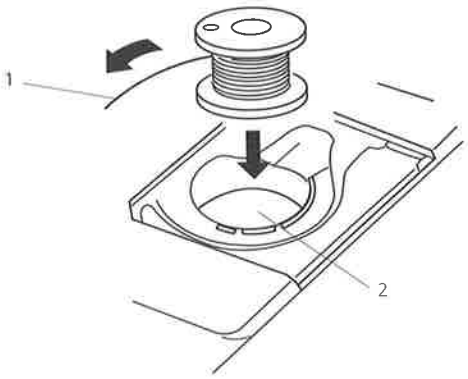

Inserting the bobbin
Place the bobbin in the bobbin holder with the thread unwinding counter-clockwise.

1. Thread
2. Bobbin holder

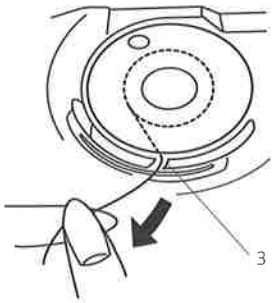

Guide the thread into front notch on the front of the bobbin holder.
Draw the thread to the left, sliding it between tension spring blades.

3. Front notch

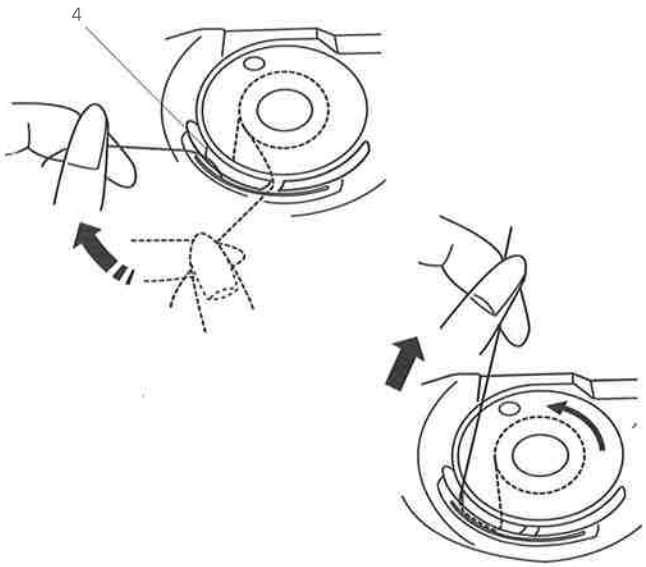

Continue to draw the thread lightly until the thread slips into side notch.

4. Side notch

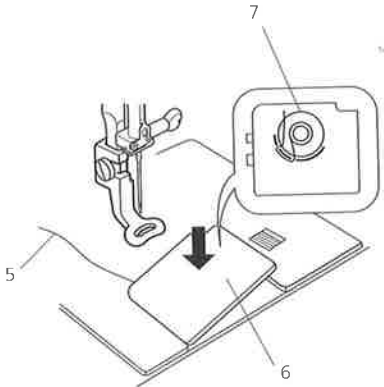

Pull out about 10 cm (4") of thread to the rear.
Refer to the threading chart shown on the hook cover plate to check the threading
Re-attach the hook cover plate.

5. Bobbin thread
6. Hook cover plate
7. Threading chart

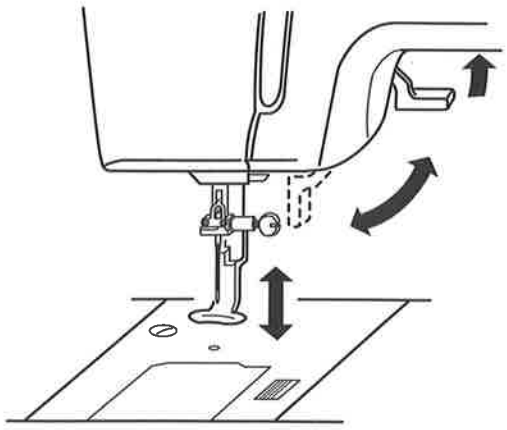

Raising the Presser Foot
The presser foot lifter raises and lowers the presser foot. The presser foot can be raised about 6 mm (1/4") higher than the normal up position. This will help you to place the embroidery hoop under the foot.

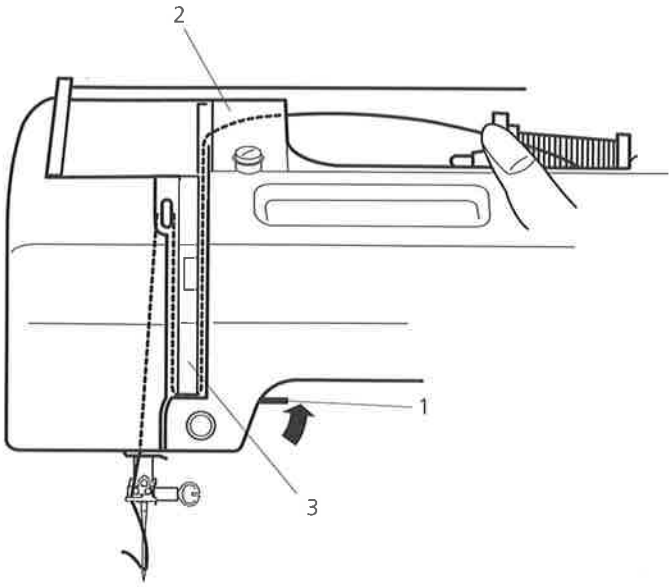

Threading the Machine
Raise the presser foot lifter. Turn the handwheel counterclockwise to bring the needle to its highest position.

1. Presser foot lifter

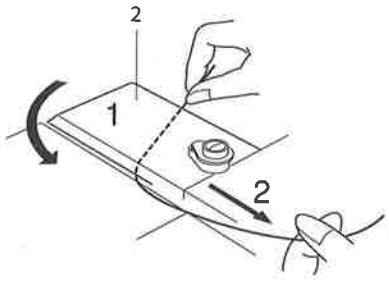

Hold the thread with both hands and pass the thread around under the thread guide plate. Then draw the thread down through the right channel of the thread guide plate.

2. Thread guide

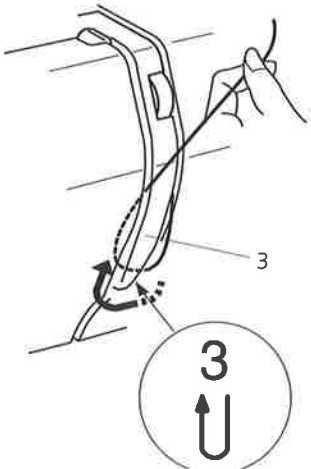

Firmly draw the thread around the bottom of the thread guide plate and up to the thread take-up lever.

3. Thread guide plate

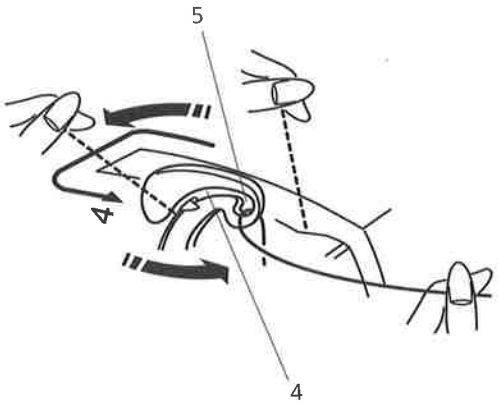

Slip the thread through the slit and down into the eye of the take-up lever as shown.
Draw the thread down through the left channel.

4. Slit
5. Eye of the take-up lever

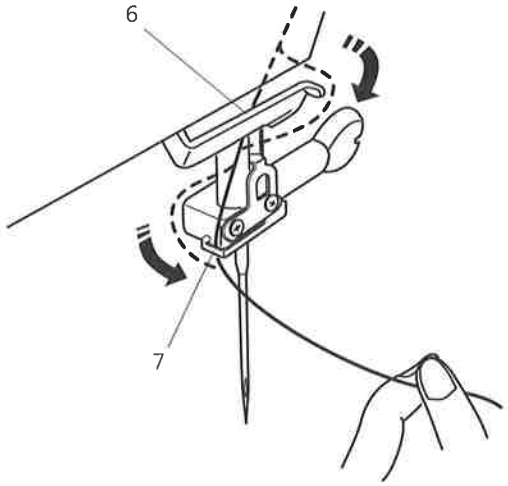

Slip the thread behind the lower thread guide from the right.

6. Lower thread guide

Slip the thread in the needle bar thread guide from the left.

7. Needle bar thread guide

Thread the needle from front to back by hand or use the built-in needle threader.

Note:
Refer to page 13 for built-in needle threader.

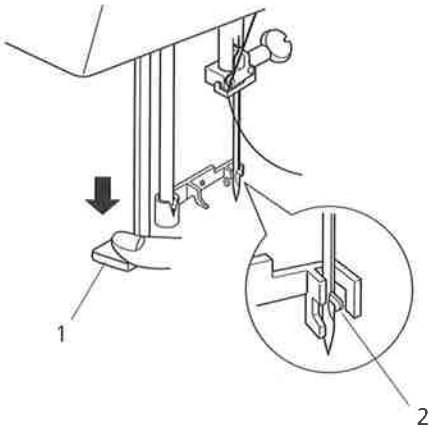

Needle Threader
Lower the presser foot. Press the needle threader lever down as far as it will go.
The hook comes out through the needle eye from behind.

1. Needle threader lever
2. Hook

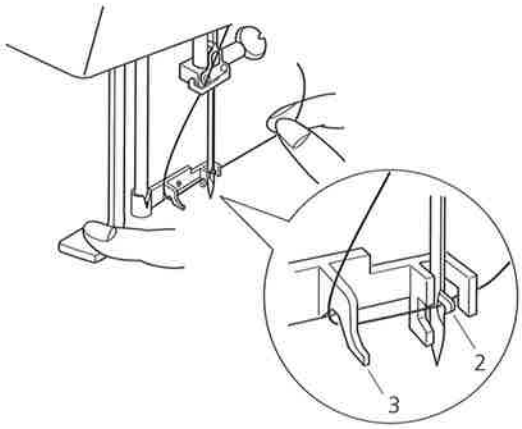

Draw the thread down around the threader guide and under the hook.

3. Thread guide

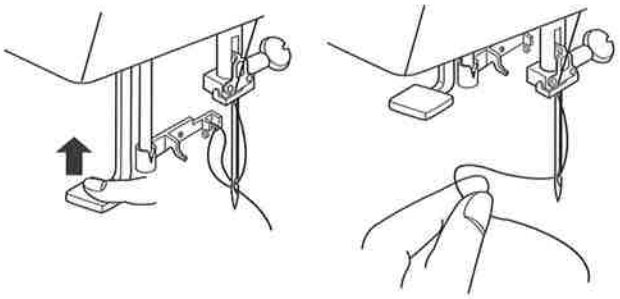

Release the threader lever slowly while holding the thread end with your fingers. A loop of the thread is pulled up through the needle eye.

Remove the loop from the threader and pull out the thread end from the needle eye.

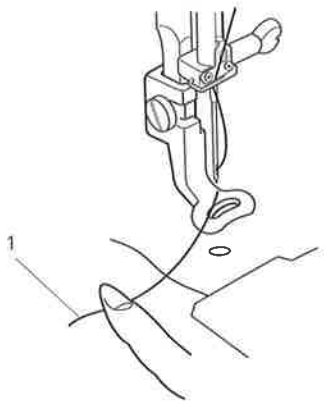

Drawing up the Bobbin Thread
Raise the presser foot lifter. Hold the needle thread with your finger.

1. Needle thread

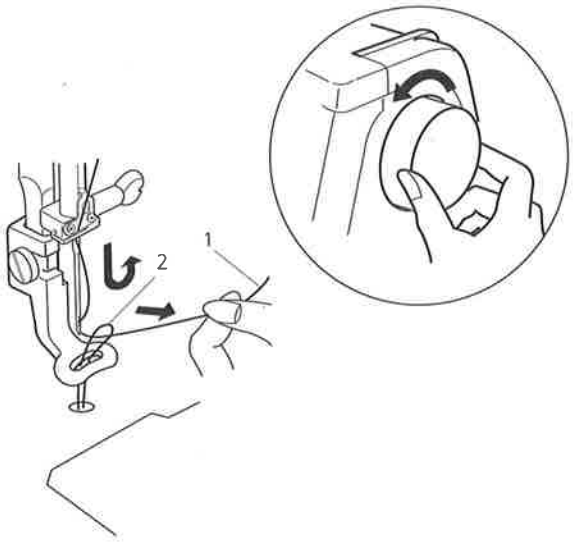

Turn the handwheel one complete turn toward you. Draw the needle thread to bring up a loop of the bobbin thread.

2. Loop of the bobbin thread

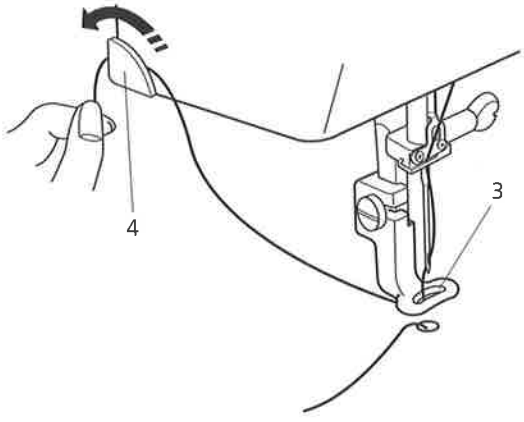

Pass the needle thread through the hole in the embroidery foot and draw it up to the thread holder leaving an inch of free thread.

3. Hole
4. Thread holder

Thread Tension

Adjust the thread tension of the upper thread with the thread tension dial (9. on page 4).
The initial position for the thread tension dial is «4». For most applications this adjustment will give suitable upper thread tension.
Depending on the material and the thickness of the embroidery thread, as well as of the fabric stitched on, it might be required to tweak the upper thread tension. It is recommended to embroider first a sample for every project. Adjust the upper thread tension according to the results on the sample.

Balanced thread tension:
Small amount of the needle thread shows on the wrong side of the fabric.

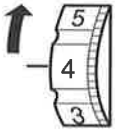

If the needle thread tension is too tight:
The bobbin thread shows on the right side of the fabric. Reduce the tension by turning the tension dial to a lower number.

1. Bobbin thread

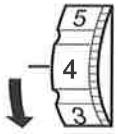

If the needle tension is too loose:
The needle thread forms loops and the stitches look loose. Increase the tension by turning the dial to a higher number.

Change Needle

Turn off the power switch and disconnect the machine from the power supply.

Raise the needle by turning the handwheel and lower the presser foot.

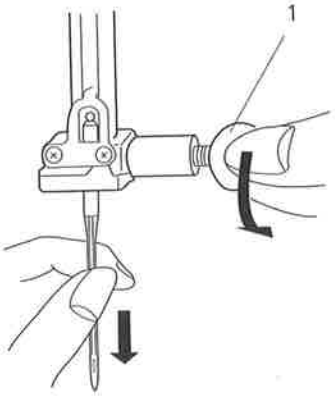

Holding the needle tight, loosen the needle clamp screw by turning it counterclockwise.
Remove the needle from the clamp.

Insert a new needle into the needle clamp with the flat side of the needle to the rear.

1. Needle clamp screw
2. Flat side of the needle

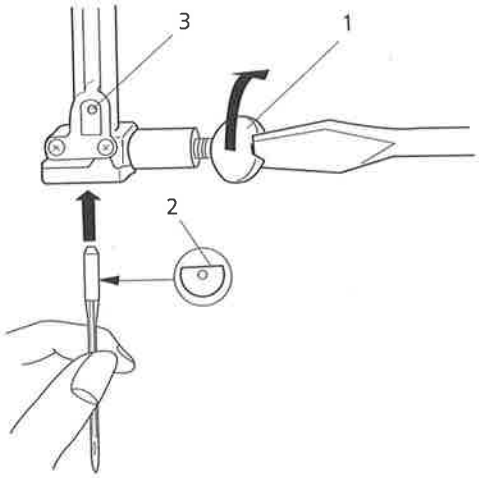

When inserting the needle into the needle clamp, push it up against the stopper pin and tighten the needle clamp screw firmly.

3. Stopper pin

Note:
Never use a blunt needle. To check needle straightness, place the flat side of the needle onto something flat (a needle plate, glass etc.). A gap between the needle and the flat surface should be consistent.

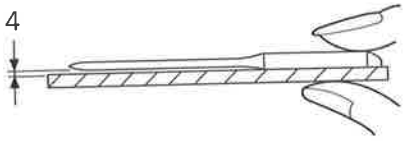

4. Gap

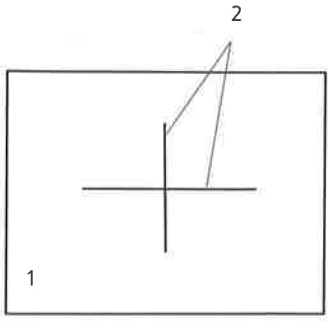

Setting a Fabric in the Embroidery Hoop
Mark the centerlines on the right side of the fabric with tailor's chalk or a fabric marker.

1. Fabric
2. Centerlines

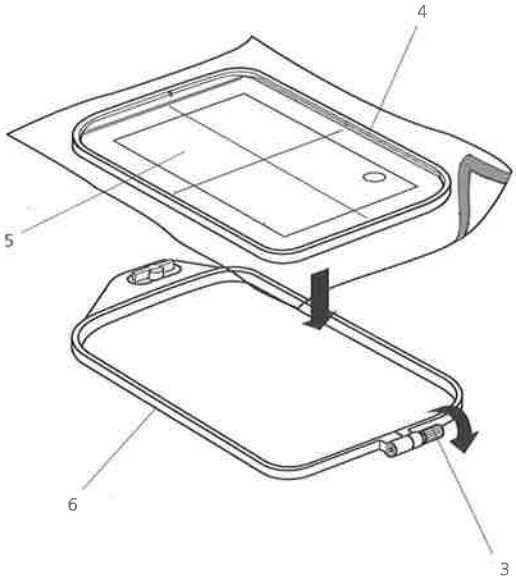

Loosen the hoop tightening screw of the outer hoop.
Lay the inner hoop and template over the fabric, matching the centerlines on the fabric and template.

3. Hoop tightening screw
4. Inner hoop
5. Template

Place the fabric over the outer hoop and push the inner hoop into the outer hoop.

6. Outer hoop

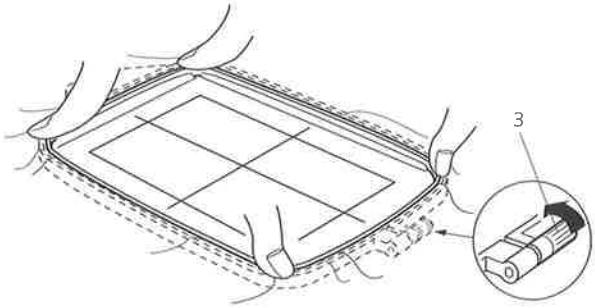

Tighten the hoop tightening screw to stretch the fabric. Make sure that the fabric is stretched drum-tight in the hoop.
Remove the template.

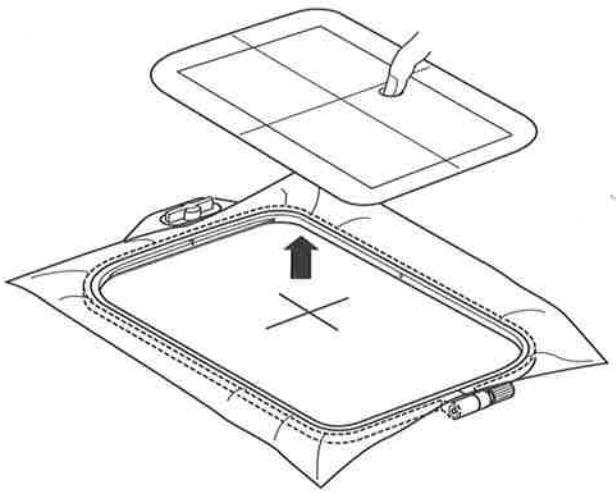

Note:
When placing the fabric on the embroidery hoop, place the outer hoop on a flat surface.
For thin and stretchy fabrics, use an adhesive type stabilizer (iron-on type) on the wrong side of the fabric. More than one layer may be required.

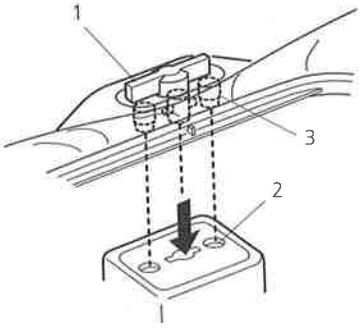

Attaching the Embroidery Hoop to the Machine

Turn the attaching knob so it is parallel with the hoop, and set it on the carriage.

1. Attaching knob
2. Carriage holes
3. Pins

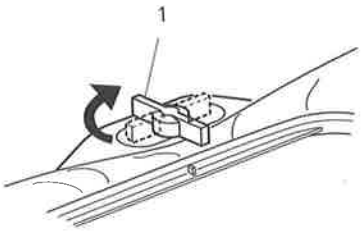

Turn the attaching knob clockwise.

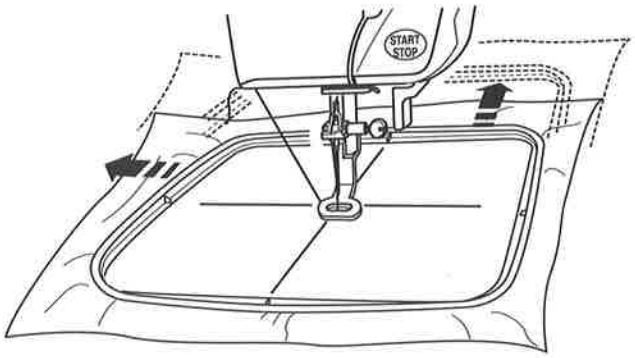

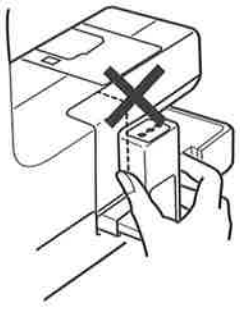

Caution:
Always provide sufficient clearance for the embroidery carriage behind your machine before starting the machine.
Do not force to move the carriage by hand.
Return the carriage to the stored position before turning the power off.

Stabilizer
To obtain the best quality embroidery, it is important to use stabilizers.

Types of stabilizer
Tear-away Stabilizer is made from a fiber that will tear easily. Use tear-away stabilizers for stable woven fabrics. After stitching, tear away the stabilizer so that the small portion left in the back of the stitching will not affect the wear.

Iron-on Stabilizer is an adhesive type stabilizer for knits and all kinds of unstable fabrics. Fuse it to the wrong side of the fabrics with an iron.

Cut-away Stabilizer is a non-woven fiber that does not tear. Cut the excess portion after stitching. Use cut-away stabilizers for knits and all kinds of unstable fabrics.

Water Soluble Stabilizer will dissolve in water. Use this stabilizer for cutwork or lace embroidery, and also for the right side of pile fabrics such as toweling to avoid loops coming through the embroidery.

Sticky Stabilizer is a sticky paper used for securing a small fabric or work that cannot be secured in the hoop. It is also used for velvet and other napped fabric that would be permanently marked by the hoop.

Usage:
The stabilizer should be attached to the wrong side of fabric. More than one layer may be required. Felt or stable fabrics do not need to be stabilized and you may embroider directly on them.
For firm fabrics, you may place a thin stabilizer under the fabric. The non-adhesive type should be used when embroidering fabric which cannot be ironed or for sections which are difficult to iron. Cut the stabilizer larger than the embroidery hoop and set it on the hoop so that the entire piece is fastened with the hoop to prevent movement of the fabric.

Adhesive (Iron-on) Stabilizer
Place the wrong side of fabric and the glossy side of the stabilizer together. Fold up a corner of the stabilizer and fuse it with an iron.

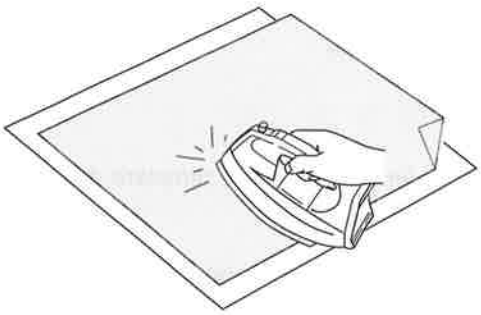

Notes:
Fold up a corner of the stabilizer, to make it easier to peel off the excess stabilizer after stitching. Ironing temperatures vary depending on kind of adhesive type stabilizer.

Your embroidery computer can handle almost every materials commonly used. However, to achieve best embroidery results it is important to use the correct materials and tools for your project. The next pages will give you a short overview of the most important rules to make this choice. For more detailed informations please contact your BERNINA dealer or read specific technical literature.

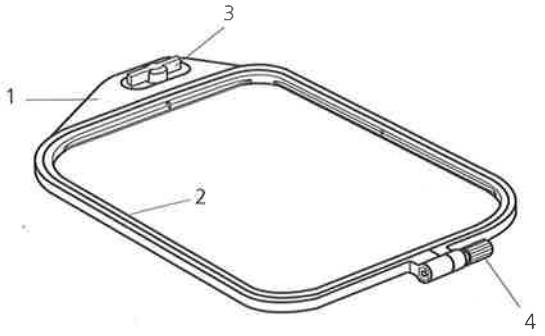

Embroidery Hoop
The Deco 330 is supplied with two hoops. Use hoop A for regular designs up to 126 mm x 110 mm, while the hoop B will accommodate a large design up to a 200 mm (8") by 140 mm (5 1/2").

1. Outer hoop
2. Inner hoop
3. Attaching knob
4. Hoop tightening screw

Please see your BERNINA dealer for additional hoop sizes. The following hoops are preset in the embroidery computer:

Hoop C: for free arm embroidery, 50 x 50 mm
Hoop F: round, embroidery area 126 x 110 mm

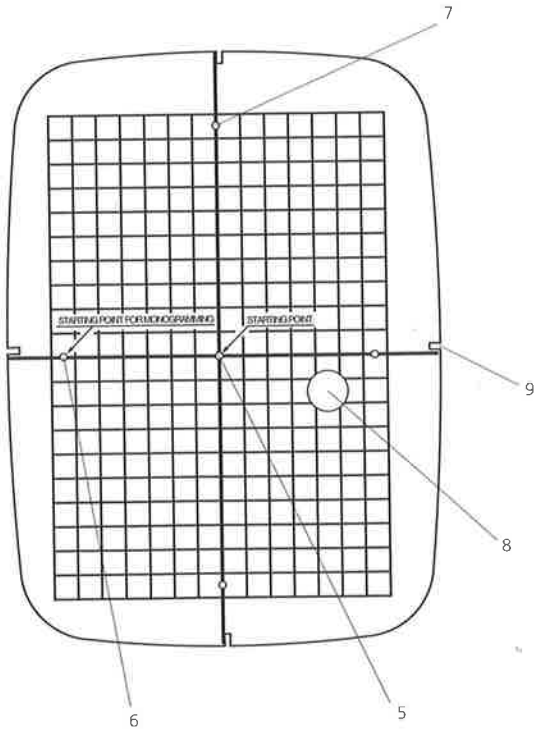

Templates
When positioning the fabric into the hoop, use the template to align the centerlines on the fabric with the center of the hoop. First mark the centerlines on the fabric and place the fabric on the outer hoop. Place the inner hoop and template over the fabric and adjust the fabric placement.

5. Starting point for built-in designs and Embroidery cards.
6. Starting point for monogramming in horizontal placement
7. Starting point for monogramming in vertical placement
8. Finger hole

Note:
The four indentations on the template do not correspond with the reference lines.

9. Positioning indentations

Embroidery Threads

One of the most important elements in successful embroidery is the quality of the thread. We strongly recommend that you purchase thread from a reputable BERNINA dealer in order to avoid irregularities, thread breakage, etc. which so often occur with poor quality threads.

Embroidery is particularly effective if you use glossy rayon or polyester embroidery threads as upper threads. They are available in a wide range of colors for beautiful embroidery.

Polyester Threads

Polyester with a brilliant sheen is a hard wearing colorfast thread and has a high tensile strength. It is suitable for all types of embroidery, especially children's clothing and items which will be washed often or subject to much wear and tear.

Rayon Threads

Rayon is a soft viscose fiber with a brilliant sheen and suitable for fine, delicate embroidery, or items that will not receive excessive wear and tear.

Metallic Wrapped Polyester Thread

Metallic thread is a light- to mediumweight thread suitable for special effects in embroidery.
Preferably use with a Metafil 130/705 H-MET needle or Organ needle of varying sizes.

Bobbin Threads

Bobbin-Fil (Special Bobbin Thread)

Bobbin-Fil is an especially soft and light polyester thread suitable for bobbin thread. This special bobbin thread ensures a steady thread tension and an optimal intertwining of the upper and bobbin thread.

Darning and Embroidery Thread

Fine mercerized cotton thread suitable for embroidery (Mettler 60 weight suggested), which is embroidered on cotton fabric.

Embroidery Needles
- use correct needle size for each thread
- exchange needle regularly

The following are the guidelines:	Needle No.
fine fabrics: fine thread (darning thread, embroidery thread)	70–75
medium fabrics: normal thread	80–90
heavyweight fabrics: stronger thread	100, 110, 120

Needle, Thread and Fabric

Care has to be taken when combining needle and thread.

The correct needle size does not only depend on the chosen thread, but also has to be well-suited to the fabric used. The fabric weight determines the thread weight and needle size.

Needle/Thread Combination
In order to check the needle/thread compatibility, the correct size thread must correspond with the correct size needle.

Correct Needle/Thread Combination
When sewing, the thread should travel smoothly down the long groove on the back of the needle. The thread can be secured optimally.

Too Thin Thread or Too Thick Needle
The thread does not travel smoothly in the groove. Faulty stitches and damage of the thread can occur.

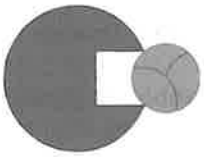

Too Thick Thread or Too Fine Needle
The thread rubs on the edges of the groove and can get jammed. This can break the thread.

Needle Summary
BERNINA uses needle system 130/705 H. This system number refers to shank shape as well as to length and form of the needle point.

130/705 H S 70

- 70 — Shank diameter = 0,7 mm (needle size)
- S — Needle point e.g. medium ball point
- H — Needle scarf
- 705 — Flat shank
- 130 — Domestic machine

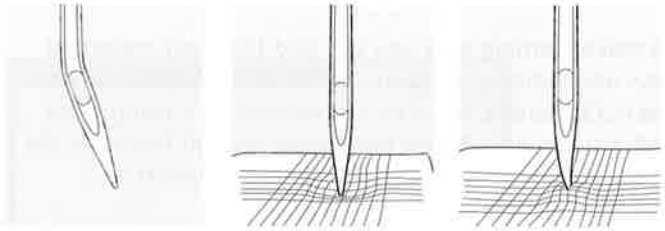

Checking the Needle Condition
The needle condition should be checked and the needle replaced regularly. A defective needle not only damages the sewing but also the sewing computer.
The following are the guidelines: replace needle when starting a new sewing project or as required.

Many materials are easier to sew if the appropriate needle is used.

Type of needle	Model	Suitable for	Needle size
Universal 130/705 H	 Normal point, slightly rounded	For nearly all natural and synthetic fabrics (woven and knitted)	60–100
Jersey/Stretch 130/705 H-SUK	 Ball point	Jersey, stretch fabrics	70–90
Embroidery 130/705 H-E	 Large eye, slight ball point	Embroidery on all natural and synthetic fabrics	75–90
Metafil 130/705 H-MET	 Large eye	sewing with metallic threads	75–90

Special needles are available at your BERNINA dealer.

BERNINA®

Embroidery System

deco 330

© Fritz Gegauf Ltd
BERNINA Sewing Machine Manufacturers
CH-8266 Steckborn / Switzerland
www.bernina.com

To make learning easy you will find the most important keys and indications always at the same location on your Deco 330 screen. For your convenience it is using icons and a status line. Please familiarize yourself first with the basic procedures and these important elements as described below.

When the machine is switched on, the pattern selection window appears on the LCD touch screen.

Note:
It requires approximately six seconds for the pattern selection window to be displayed on the LCD touch screen. This is the required boot up time and is not a defect. During the boot up the BERNINA deco 330 logo is displayed.

To select a function, just touch the key on the screen with your finger tip.

Caution:
Do not press the surface of the LCD touch screen with hard or sharp pointed objects like pencils, screwdrivers, or the like.

Note:
The screen contrast as well as the adjustment of the touch screen can be adjusted by touching the utility key and then setup

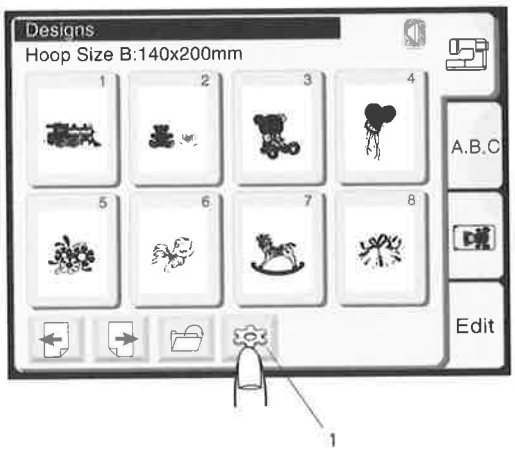

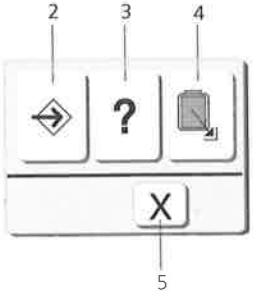

Function Keys

Utility key:
Press this key to open the mode selection window. There are 3 categories available in the mode selection window.

1. Utility key

2 Setup key
Press this key to customize the machine settings.

3 Help key
Press this key to view the help topics for basic operations.

4 Return carriage key
Press this key to bring the carriage back to its stored position after finishing embroidery.

5 Close key
Pressing this key will close the utility selection window and return to the previous screen.

Note:
Before you turn the power switch OFF, always be sure to press the return carriage key to return the carriage to its stored position.

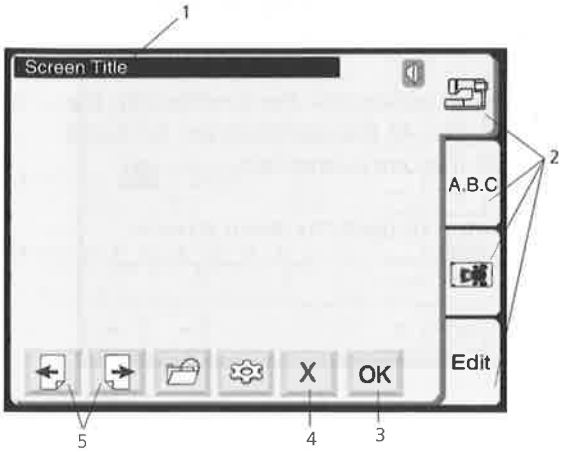

1 Status Line: Displays the current status of the embroidery computer
2 Selection Tabs: Touch to choose the different categories on a screen.
3 OK-key: Confirm entries. Modification in this screen will be stored.
4 X-key: close the current screen, without saving any modifications.
5 Page-keys: Scroll through pages of larger menus.

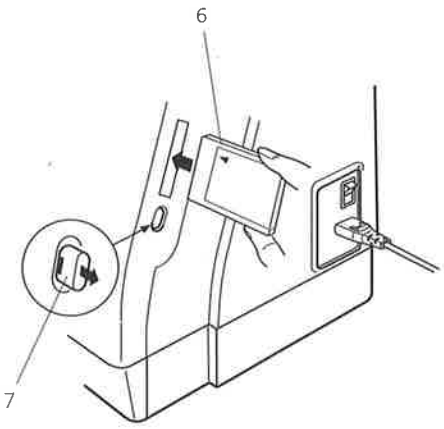

Personal Design Card (Optional accessory)

Inserting and Removing of a Design Card
Insert the card into the slot with the front side facing to you.
Push the card until it clicks and the eject button will pop out.

6. Personal design card (optional accessory)
7. Eject button

Note:
When the power is turned on with a Design Card Slot,it will take sometime to get the embroidery computer booted.

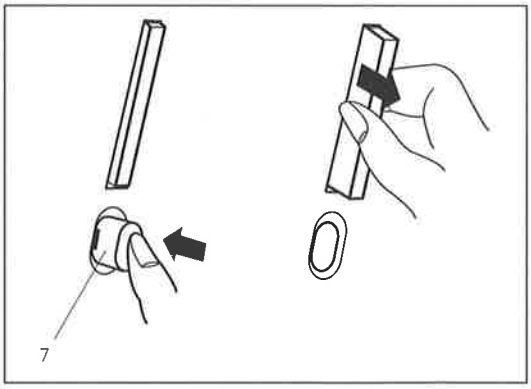

Ejecting the card
Push the eject button to eject the card.
Take out the card from the machine.

Caution!
Never turn the power off or eject the card while the warning sign or hourglass is displayed. Otherwise, data stored in the memory may be lost or damaged.

= warning sign

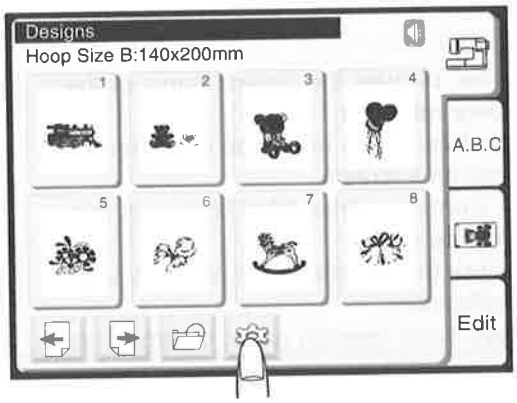

Adjust User Preferences / Setup

Use these screens to personalize the functions on the emboridery computer. All these settings are be stored permanently until they are overwritten.

Press Utilities - Setup to open the setup screens.

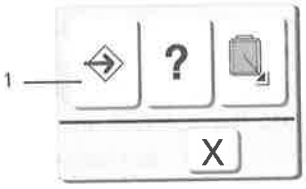

1 Setup key
Press this key to open the setup window.

In this mode there are two tabs to choose from:
- 2 Setup tab
- 3 Language selection tab

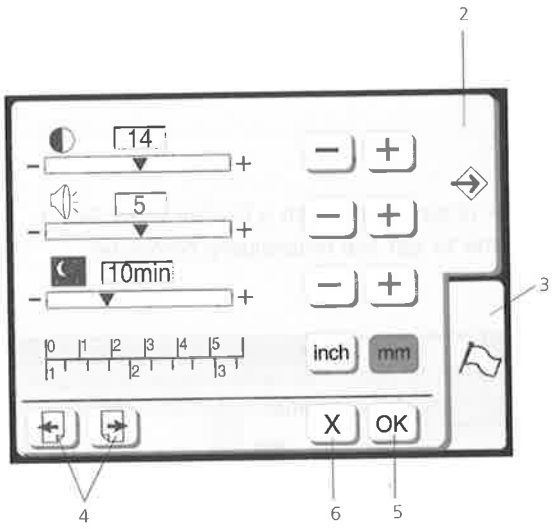

2 Setup tab
Press this key to open the machine settings page.

3 Flag tab (Language selection tab)
Press this tab to select the language for the screen display. You can select one of 6 languages.

4 Page keys
Press either one of these keys to scroll between the pages of this menu.

5 Ok key
Press this key to register the new settings.

6 Close key
Press this key to cancel the new settings and close the setup window.

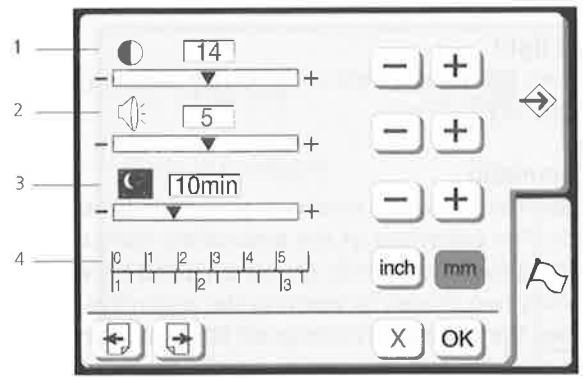

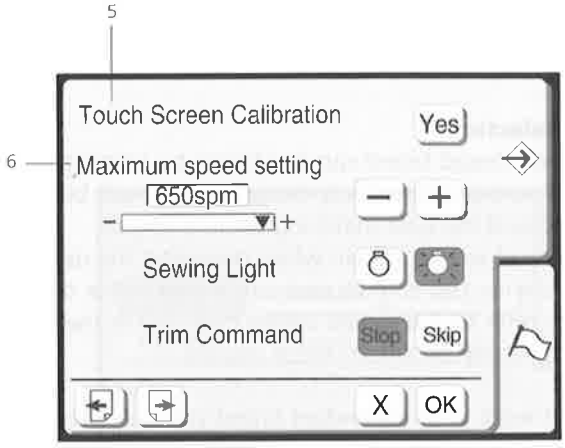

(A)

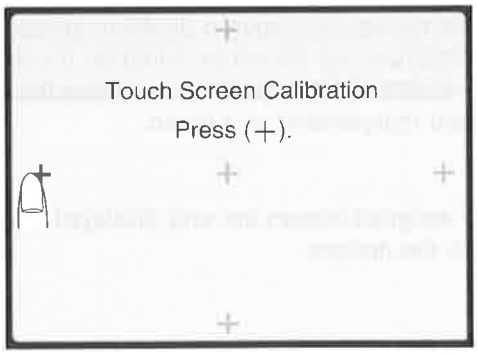

(B)

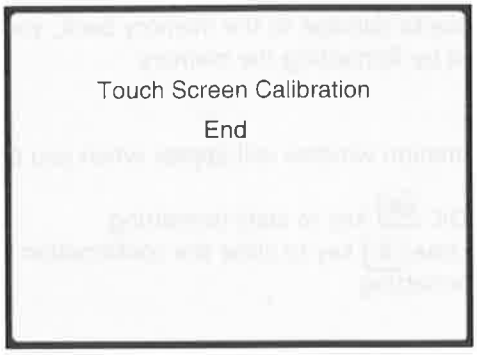

1 Screen contrast
The touch screen contrast can be adjusted.
Press the plus [+] key, to sharpen the screen contrast.
Press the minus [−] key, to fade the screen contrast.

2 Sound control
The buzzer volume can be adjusted. The volume level can be set from 0 to 10 and the default setting is 5.
Press the plus [+] key to increase the buzzer volume.
Press the minus [−] key to decrease the buzzer volume.
To mute the buzzer, set the level at 0.

3 Eco mode
If you have not used the computer for some time it will enter the eco mode. The touch screen and the sewing light will turn off. They will turn on again, when you touch the screen.
You can set the timer from one minute to 30 minutes.
Press the plus [+] key to increase the timer setting.
Press the minus [−] key to decrease the timer setting.
To deactivate the eco mode, press the plus key until «OFF» appears in the box.

4 Inch/Millimeter
You can set your computer's measuring unit to either inch or millimeter depending upon your preference. The default unit setting is millimeter.
Press the «inch» or «mm» key to select the unit you preferred.

5 Touch screen calibration
If the touch panel doesn't respond as expected, the key positions might be out of alignment. To realign press the Yes key. Window (A) will show a sequence of crosses signs. Press the cross with your finger tip. Having pressed one cross the next will be shown. Window (B) shows for a few second when the calibration is completed.

6 Embroidery maximum speed:
The embroidery computer automatically adapts the stitch speed to the design: slow for long stitches and fast for short stitches
The maximum embroidery speed can be changed from 400 to 650 spm. The default setting is 650 spm.
Press the minus [−] key to reduce the maximum embroidery speed.
Press the plus [+] key to increase the maximum embroidery speed.

Note:
Reduce the embroidery speed when design with narrow zigzag stitches that tend to deform at the high speed.

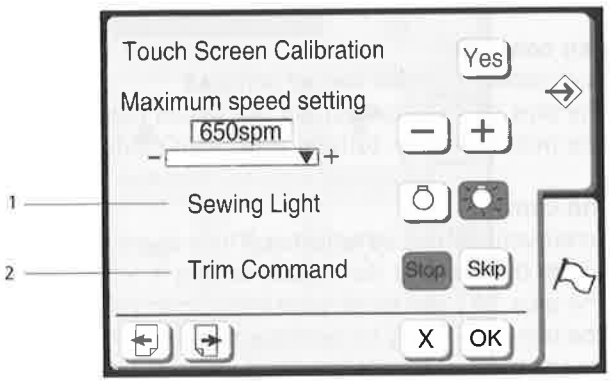

1 Sewing light
You can turn the sewing light on or off by pressing the sewing light key.

2 Trim command
Some embroidery designs come with embedded trim commands. The behaviour of the embroidery computer when reading such commands can be adjusted between the following two modes by pressing the respective key:
«Stop» Stop the embroidery computer stops at every trim command and requests the user to cut the thread.
«Skip» Skip the embroidery computer ignores the trim command and continues the next operation.

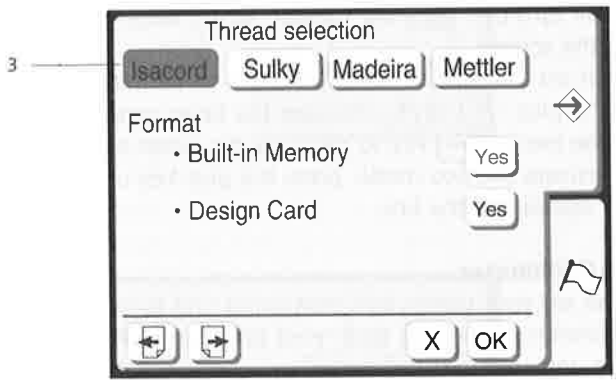

3 Thread selection
The preferred thread brand can be chosen by pressing the corresponding brand key. Every design opened will be recalculated and the best matching colours of your preferred brand will be shown when reviewing the design. Four brands with 104 colours each are preset in the deco 330. Please refer to the thread colour overview in the Appendix for more details on these colours.

If you don't work with a standard brand you may press the selected brand name a second time. With no brand selected the thread calculation is disabled. Instead the thread descriptions are shown as stored on the design card. This accommodates the user, to choose the best fitting colour independent of a brand.

Note:
The newly assigned colours are only displayed, but not stored with the designs.

Formatting the memory
If the internal memory or ATA Design Card does not function due to damage to the memory bank, you need to re-enable it by formatting the memory.

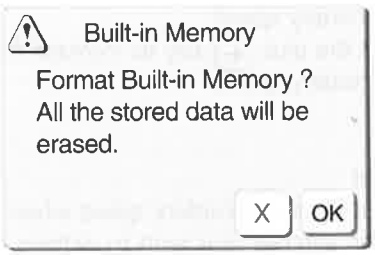

The confirmation window will appear when you press the Yes key.
Press the OK OK key to start formatting.
Press the close X key to close the confirmation window without formatting.

Caution!
Formatting either the internal memory or the ATA design card will delete all designs in the corresponding memory or card.

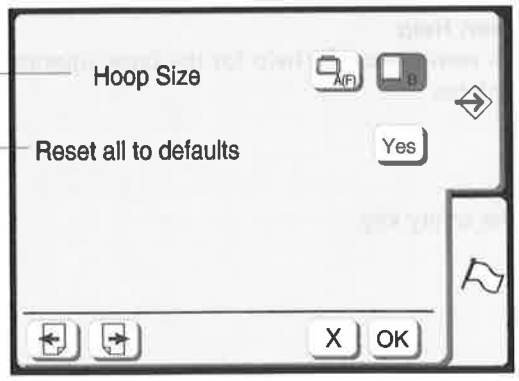

1 Hoop Size Selection
Choose the default hoop size by pressing the corresponding key. This selection will only be assigned for monogramming.

Note:
This function is valid only for monogramming.

2 Setting all to default
Press the Yes key to return all settings to factory default.

Note:
The language setting remains unchanged.

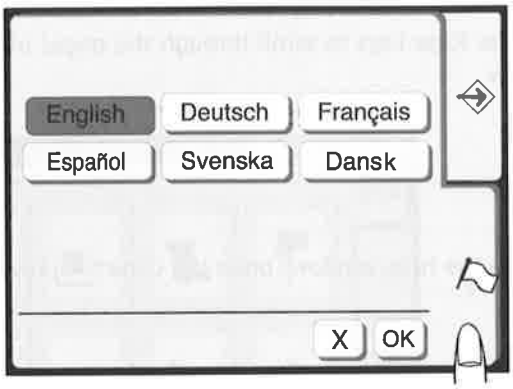

Language Selection
You can select one of the following 6 languages by pressing the corresponding key:

- English
- German
- French
- Spanish
- Swedish
- Danish

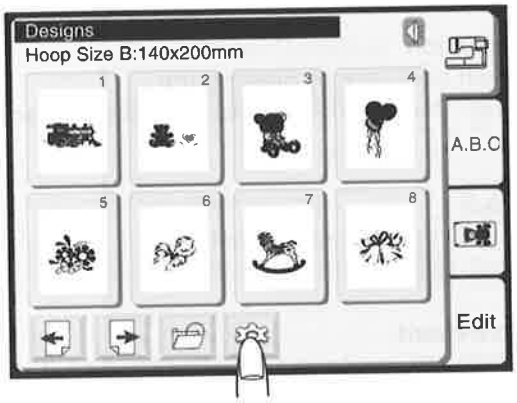

On-screen Help
You can view on-screen help for the basic operations of the machine.

Press the utility key.

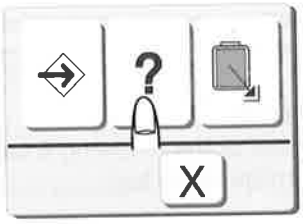

Press the help key in the utility selection window.

Select a help topic by pressing the ? key next to the topic.
Press the Page keys to scroll through the pages of a help window

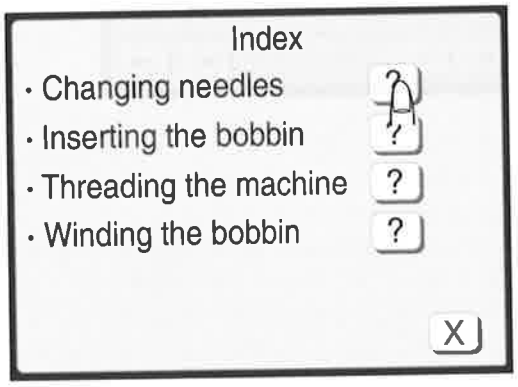

Note:
To close the help window, press the close X key.

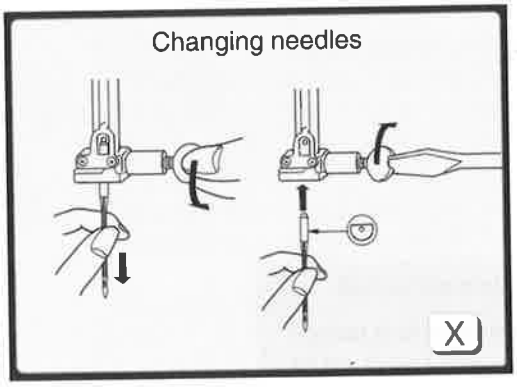

The illustrated help of the selected topic will be displayed on the screen.
Press the close X key to go back to the previous display.

Pattern Selection Window
The main screen with the Pattern Selection Window will start automatically when the embroidery computer is switched on. Use this window to open embroidery designs from the following locations:

1. Built-in Designs
2. Monogramming (integrated or design card with alphabets)
3. Design Cards (commercial or Personal Design Card)
4. Restore Designs from the internal memory of the Deco 330

Read how to open designs from these location on the next pages.

Pattern selection window
Press one of the four tabs to select the desired category.

1 Built-in designs
There are 50 designs available in this category. For details of the designs such as size, stitch count and thread colour please refer to the table in the appendix.

This category allows you to restore designs from the internal memory as well. Please refer to page 33 («Open File»)

2 Lettering / monogramming
There are three fonts for lettering (Gothic, Script and Cheltenham) built into the deco 330. Further there is a choice of 3 letter and 2 letter monogramming available.

Use this selection as well to open fonts from the optional Design Cards with alphabets.

3 Design Cards
Use this category to open embroidery designs from the optionally available design cards. Every BERNINA embroidery card can be used. For further details about compatibility of design cards please refer to corresponding chapter «Design Cards and Compatibility»

Choose frames included on Design Cards with alphabets through this category

4 Editing
The editing function allows you to modify and combine the embroidery designs from various sources.

For details see page 43- 50.

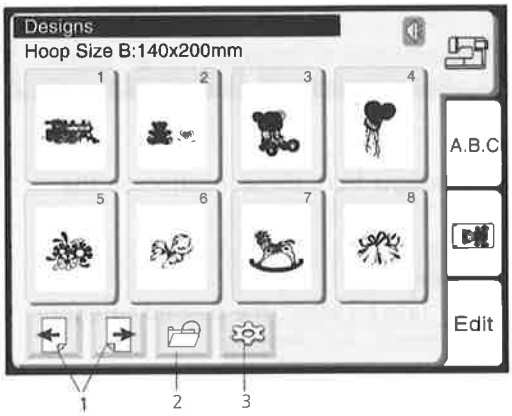

Open Built-In designs and from Design Cards
Press the corresponding tab in the Pattern Selection Window to open built-in designs or designs stored on Design Cards. The same window is used to select the design.
8 Designs that are displayed at once on one page of the the pattern selection window.

1 Page keys
Press the key to view the next page.
Press the key to view the previous page.

2 Open file key
Press this key to open the saved files (refer to page 24 for more details).

3 Utility key
Press this key to open the utility selection window (refer to page 24 for more details).

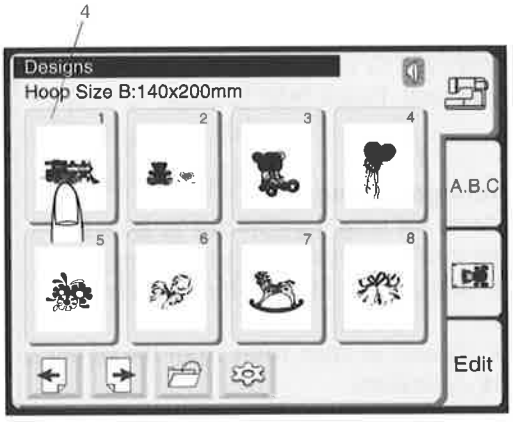

4 Pattern selection key
The pattern images of the available designs are shown on the pattern selection keys.
To select the desired pattern, press the corresponding key. The display will show the embroidery window.

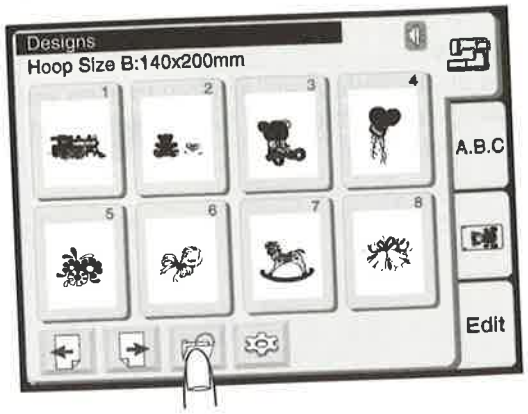

Open file key
When you press the open file key, the open file window will appear. You can open the file to embroider the programmed design that you have saved.

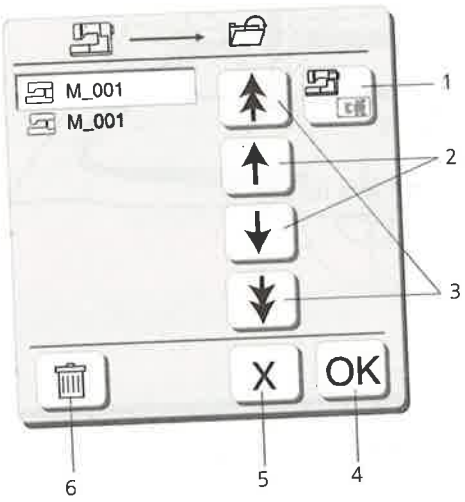

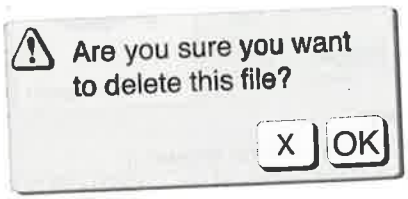

1 Press the built-in/card key to select the location of the file directory, either in the internal memory of the machine or in the Design Card.

2 Press the arrow keys to select the desired file to open.

3 Press the double head arrow keys to turn over the pages to see the saved files on the next or previous page.

4 Press the OK key to open the design in the selected file. The open file window will close and the touch screen will display the embroidery window.

5 Press the close key to cancel your selection and close the file open window.

6 When you need to delete the saved file, select the file to delete and press the delete key.
The confirmation window will appear. Press the OK key and the selected file will be deleted.
If you press the close key, the file will not be deleted and the open file window will close.

After selecting the file the embroidery window opens.
Continue as described on page 34

Embroidery Window

Use the functions on the embroidery window to align your design on the fabric. Further there are functions to select parts of a design for stitching.

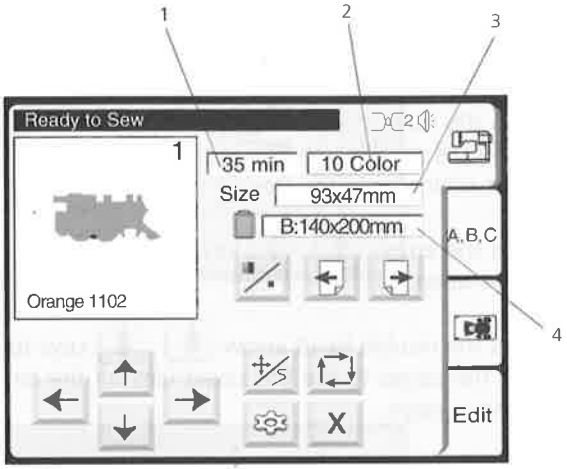

Screen Information

In the embroidery window, the following information will be shown.

1 Sewing time in minutes
2 Number of colors
3 Design size
4 Hoop to be used and its size

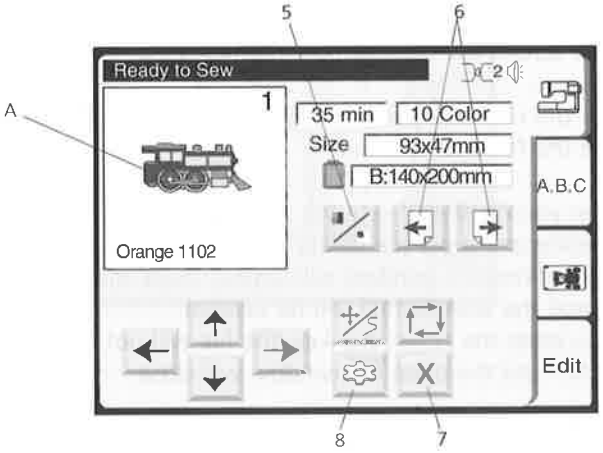

5 Image key

Each time you press this key, the selected design will be shown in the complete image and color separated image alternately.

A. Complete image
B. Color separated image

6 Color section page keys

The image of each color section will be shown in sequence when pressing these keys. In the picture the colour area will be displayed together with the colour sequence number as well as the recommended thread.

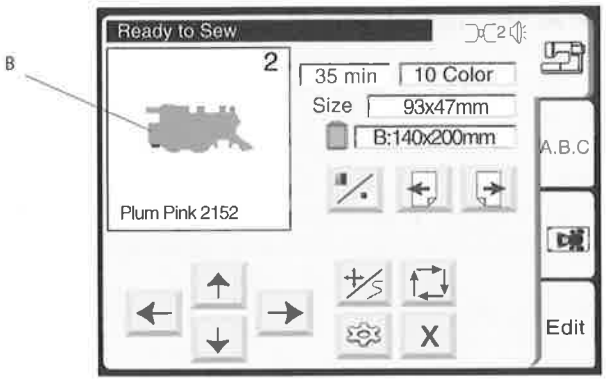

Embroider specific color sections:

Skip unwanted color sections by pressing the color section page key until the desired color section is shown on the screen. By pressing the Start/Stop key the computer will start to stitch out the selected color.

7 Close key

Press this key to close the embroidery window and return to the pattern selection window.

8 Utility key

Press this key to open the utility selection window.

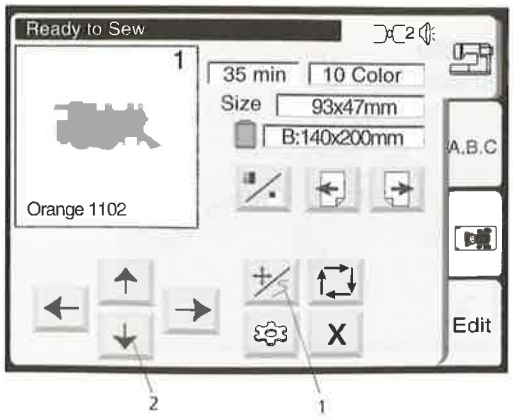

1 Jog / Stitch Key
Press this key to toggle between the jog keys and the stitch forward / backward keys.

Note:
The display automatically switches between jog keys before stitching and the stitch forward / backward keys while stitching a design out.

2 Jog Keys
Adjust the hoop position with the jog keys so that the needle enters in the center of the centerlines on the fabric.

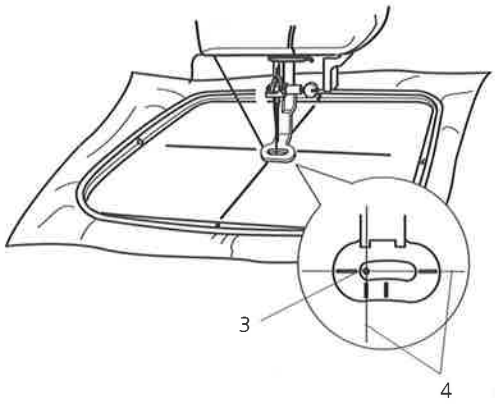

3. Needle drop position
4. Centerlines

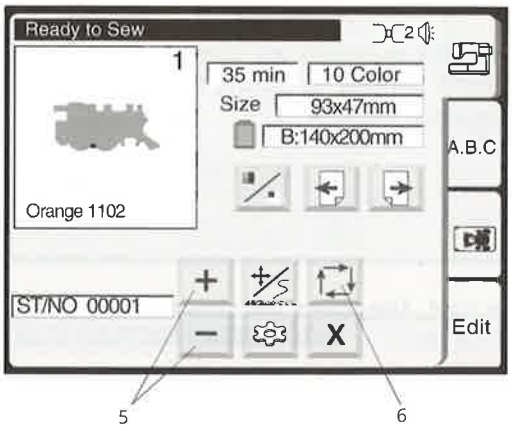

5 Stitch back/forward keys
Use this mode to trace the design as it is stitched out step by step.
Press the plus key to move the hoop 10 stitches forward in the design
Press the minus key to move the hoop 10 stitches back.

Note:
You can use these keys to move the embroidery hoop to where the thread has broken or run out.

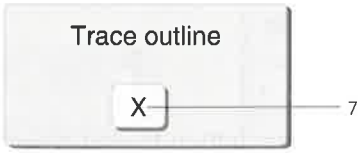

6 Trace key
You can check the size of the embroidery area by pressing this key. The carriage will trace the outline circumscribing the selected embroidery pattern without stitching.
The carriage will return to the starting position after tracing and the screen will return to the previous display.

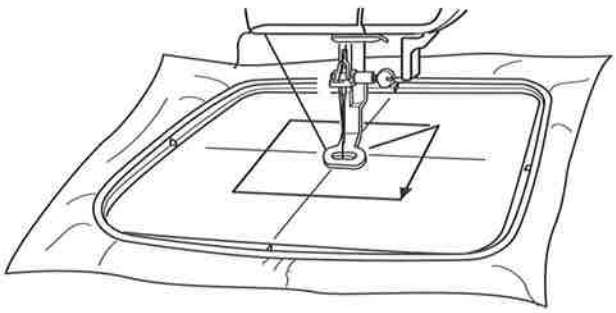

7 Close key
Press this key to close the window without tracing.

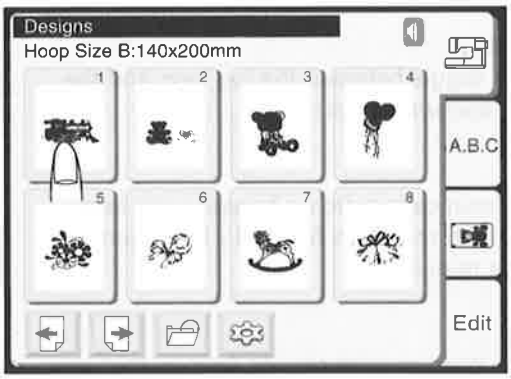

Starting to Embroider
Select the desired pattern.

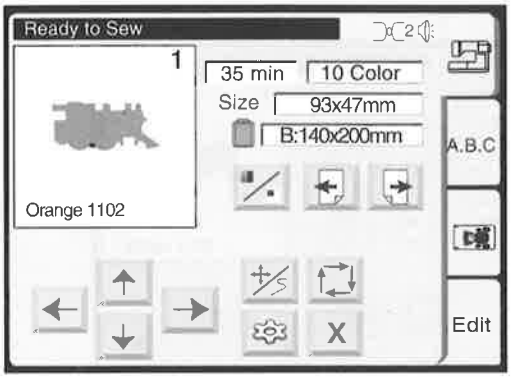

The image of the selected pattern will be shown in the embroidery window.

A

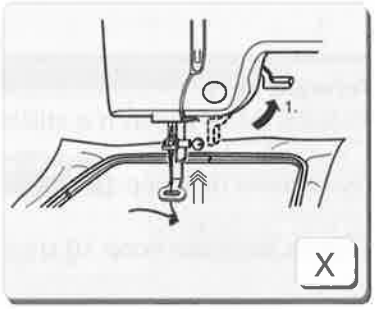

Lower the presser foot. Press the start/stop button to start embroidery.
The computer will stop automatically after stitching 5 stitches and requests the user to cut the thread tail by showing the instruction window (A)

B

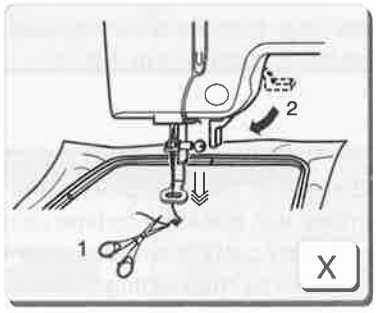

Raise the presser foot. The screen will show the instruction window (B).
Trim the thread tail close to the starting point and lower the presser foot.

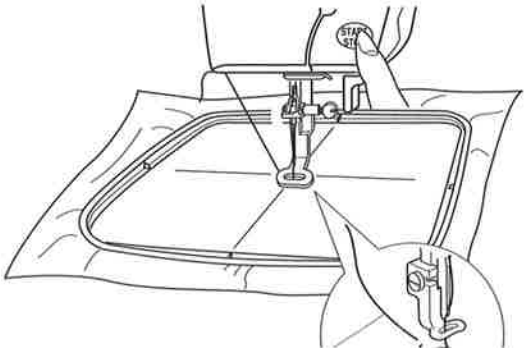

Press the start/stop button to start embroidering again and the machine will stop automatically when the first section is finished.

1 Thread tail
2 Starting point

Note:
Press the close X key to close the instruction window. This operation is only required, when the stitching process

C

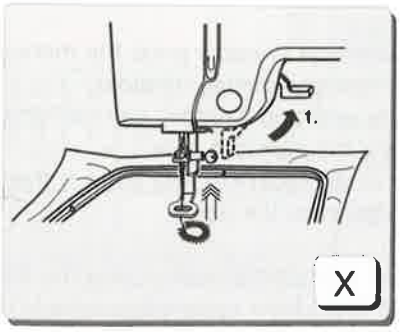

After finishing the first section, the screen will show the instruction window (C).

D

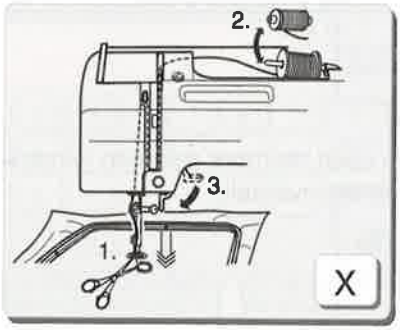

Raise the presser foot. The screen will show the instruction window (D).
Trim the thread at the end of the stitching.

Note:
Instruction window (D) closes automatically after a few seconds in order to give you free sight to the new colour to be used for threading. Press Close [X], to speed up this process.

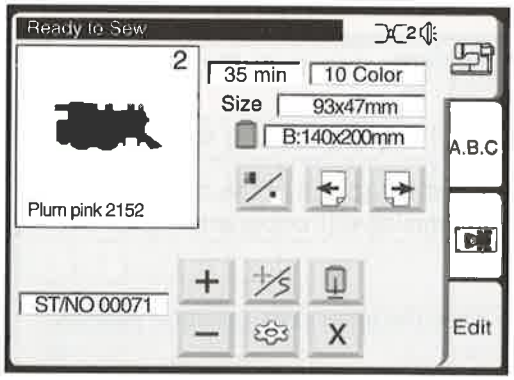

Change the thread to the next color.
Lower the presser foot and press the start/stop button to stitch the second color section.

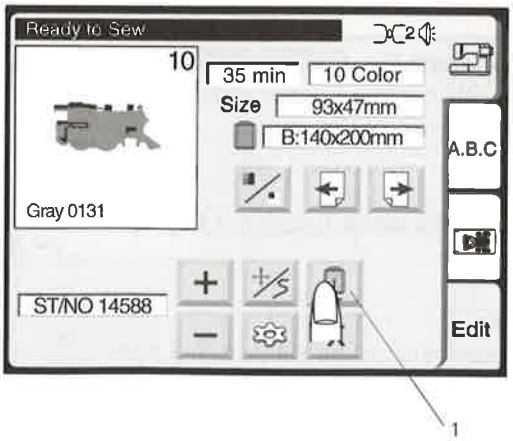

Press the carriage return key after finishing the last section to return the carriage to the stored position.

1. Carriage return key

Note:
Be sure to return the carriage to the stored position before turning the power switch off.

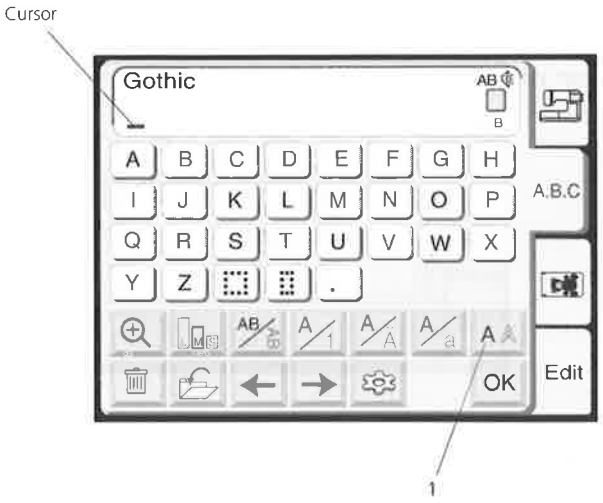

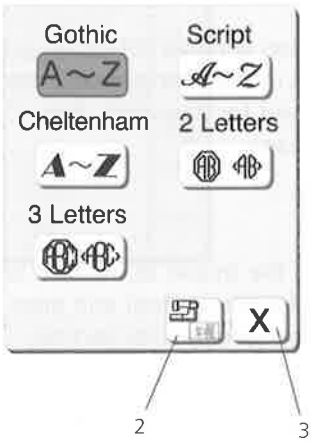

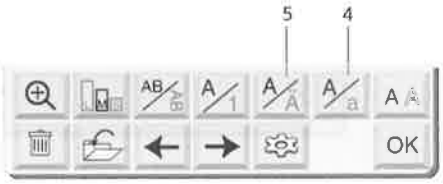

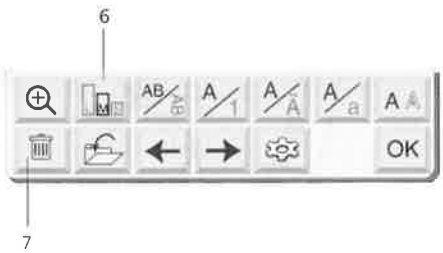

Lettering
In the Pattern Selection Window press the monogramming tab to open the monogramming window.
In the monogram selection window, you can program words by pressing the alphabet keys.
After you press an alphabet key, the letter is memorized and the cursor moves to the right.

This mode allows to create lettering using the three built-in fonts or using fonts from optionally available Design Cards. Further there is a mode to create 3 letter and 2 letter monogramming including a selection of frames.

1 Front key
Press this key to open the front selection window. The following 5 styles are available.

- Gothic
- Script
- Cheltenham
- 2 Letter Monogram
- 3 Letter Monogram

To select the desired letter style, press the corresponding key.

2 Built-in/card key
Press this key to select the source of the monogramming, i.e. built-in monogramming or monogramming card.

3 Close key
Press this key to close the letter style selection window

4 Letter case key
Press this key to select either upper or lower case letters.

5 European alphabets key
Press this key to select either Roman alphabets or European alphabets such as diaeresis.

Note:
On keys with a dash the active function is highlighted bold.

6 Letter size key
The letters and numbers can be stitched in 3 sizes.
Press this key before entering a letter to change the size
L: 30 mm (Large)
M: 20 mm (Medium)
S: 10 mm (Small)

7 Delete key
Press this key to delete the character underlined by the cursor.

Programming Lettering
(Programming «Bear» in Gothic style)

Press «**B**».

Press the letter case key to select lower case letters.

Select «**e**», «**a**» and «**r**».
Press the OK key.

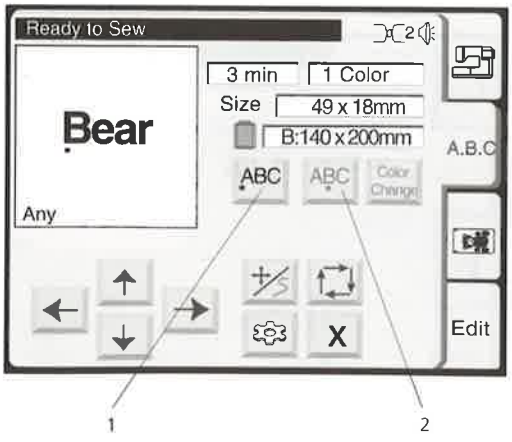

The display will change to the embroidery screen.

Selecting the Starting Point
Select the position of the first stitch in the lettering by pressing either one of these keys.

1 Left/Top key
Press this key to stitch the lettering with the left (horizontal) or top (vertical) end aligned.

2 Center key
Press this key to stitch the lettering center aligned.

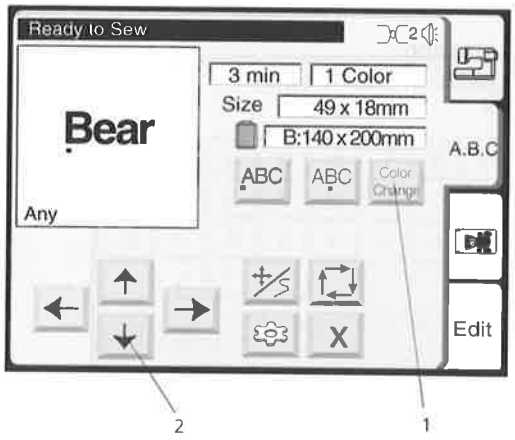

1 Color change key
Press this key to stitch a multi-color lettering.
The machine will stop automatically when each character is finished.
Change the thread and stitch the next character.

2 Jog keys
Press these keys to adjust the hoop to the start position for lettering

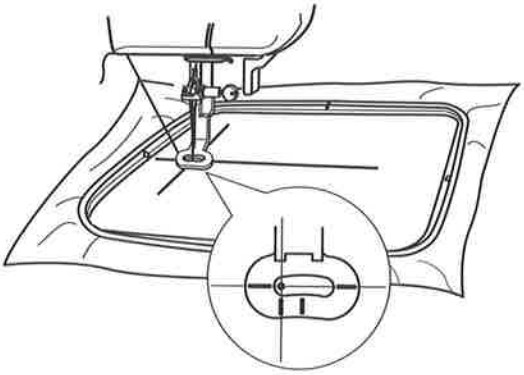

Starting to embroider
Lower the presser foot and press the start/stop button. The computer will stop automatically after stitching 5 stitches and requests the user to cut the thread tail. Refer to detailed process description on Page 36, «Starting to Embroider»)

Depending on the setting of the Color change key the embroidery computer will stop after each letter and ask to change the thread or it will stop only after the last letter has been stitched.

2 Letters Monogram

Example: 2 Letters with a crest
Select «2 Letters».

Select the crest.

Select the letter «A».

Select the letter «B».

Note:
Editing function is not available in 2/3 letters.
Press the delete key and enter a new letters instead of editing.

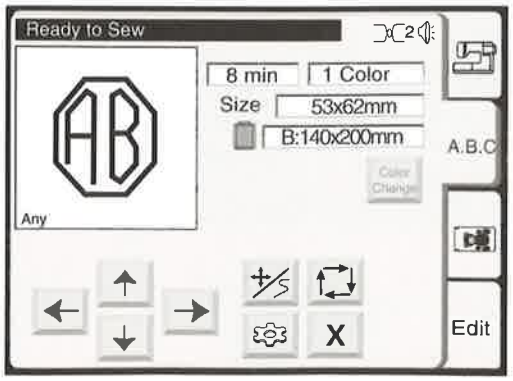

Press the OK key.
The screen will change to the embroidery window.

Press the start/stop button to start stitching.

Notes:
The 3 Letter monogram can be programmed in the same way as the 2 Letter monogram.
The 2/3 letters monogram will be stitched center aligned.

Editing the Monogram
Deleting a letter

Example: To delete «E» from «BEAT»

Press the cursor ← key to shift the cursor under the letter to delete.

Press the delete key.
The letter «**E**» will be deleted.

Inserting a letter

Example: To insert «E» to «BAT»

Press the cursor ← key to shift the cursor under the next letter where you wish to insert a letter.

Select the letter «**E**»
The letter «**E**» will be inserted between «**B**» and «**A**».

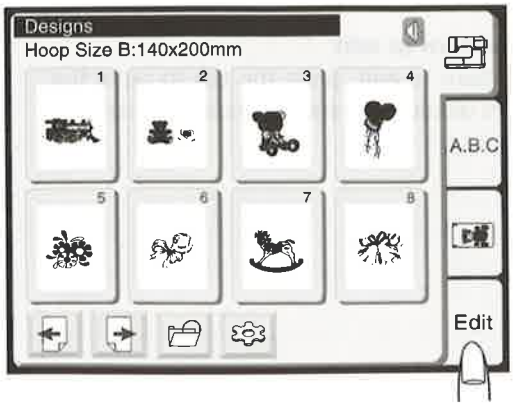

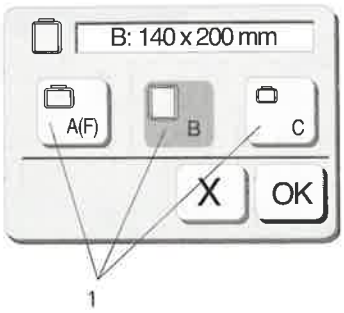

Editing window for the hoop B

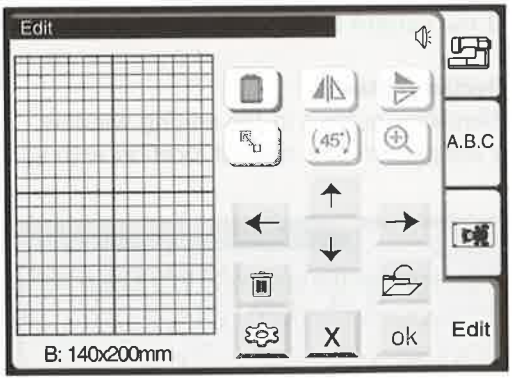

Editing Mode
The editing function allows you to modify and combine embroidery patterns to create your original designs.

Editing screen
From the Pattern Selection Window press the editing tab to open the editing window.
The hoop selection window will open to allow you to select the hoop you wish to use.

You can select one of the following hoops:

Hoop A (Standard)	126 mm by 110 mm
Hoop F (Option):	126 mm by 110 mm
Hoop B (Standard):	140 mm by 200 mm
Hoop C (Option):	50 mm by 50 mm

Press the OK [OK] key and the editing window for the selected hoop will open.
Press the close [X] key to cancel the selection and return to the editing window for the hoop B.

Note:
Refer to page 45 for hoop selection after selecting the embroidery pattern.

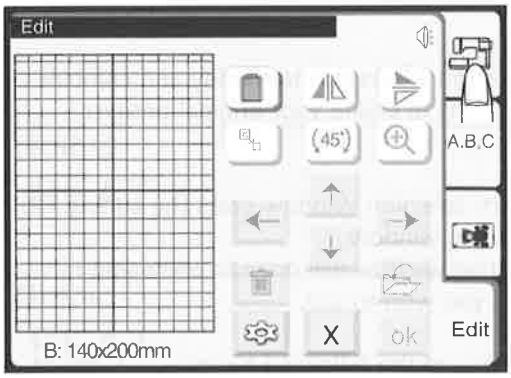

Selecting the pattern to edit
To select the pattern to edit, press the tab to open the pattern selection window where the desired pattern is.

The pattern selection window will open.
Select the desired pattern.

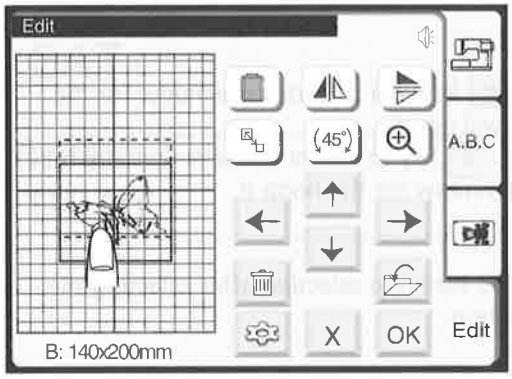

The selected pattern will be shown in the editing window. A frame around the pattern indicates it is selected.

Moving the selected pattern
To move the embroidery pattern in the editing window, touch and drag the pattern to a desired location with your fingertip.

Note:
Do not drag the pattern on the screen with a sharp pointed object.

The editing window can be used to combine embroidery designs. Built-in designs as well as designs from Design Cards and letters can be merged on the deco 330 into one single design.

These new designs are limited to:
max. 50 single designs that they are made of
a total of 64'000 stitches and
max. 104 colour sections

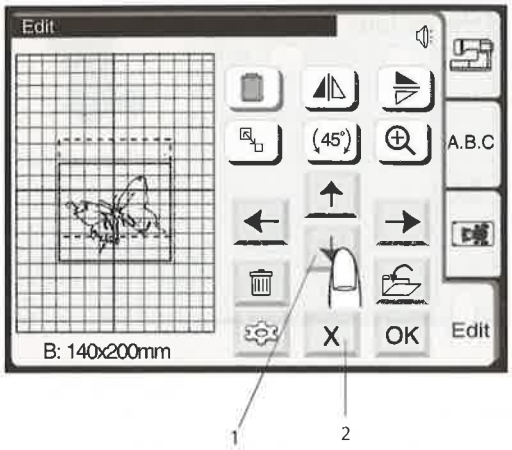

Function keys

1 Layout keys
You can move the selected pattern also with the layout keys.
Press one of the layout keys to move the pattern in the desired direction.
The carriage will not move when you press the layout keys since pattern position will move relatively to the hoop.

Note:
The layout keys look exactly the same as the jog keys but the function is different.
To move the carriage, use the jog keys.

2 Close key
Press this key to cancel editing and the screen will return to the last pattern selection window.

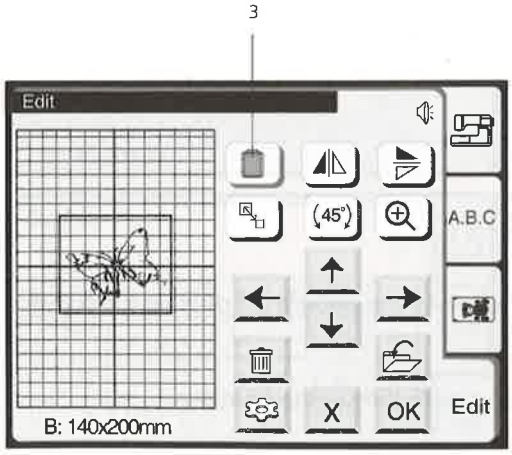

3 Hoop selection key
In the editing window, you can select the appropriate hoop.
Press this key to open the hoop selection window.

Select the desired hoop from 3 options available.

Hoop A/F (Option):	126 mm by 110 mm
Hoop B (Standard):	140 mm by 200 mm
Hoop C (Option):	50 mm by 50 mm

Press the OK [OK] key and the editing window for the selected hoop will open.

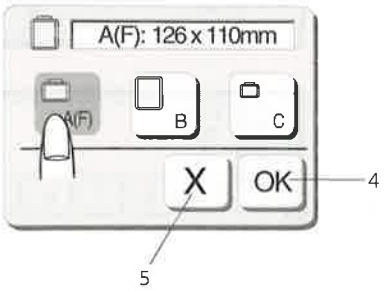

4 OK key

Press the close [X] key to return to the default setting (Hoop B).

5 Close key

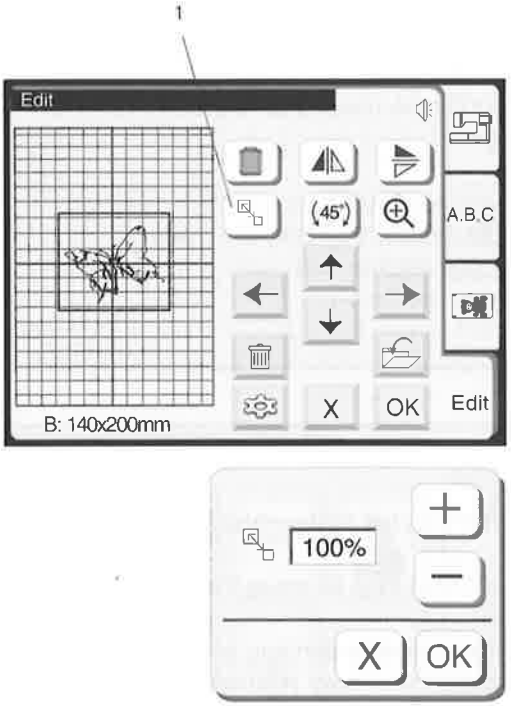

1 Resize Key
Resizing the selected pattern
Press this key to open the resize window.
To alter the pattern size, press the plus + or minus − key.
The size of the pattern can be altered from 90% to 120% of the original size.
The size will change 10% each time you press the plus or minus keys.
Press the OK OK key and the pattern at the new size will be shown in the editing window.
Press the close X key to close the resize window without resizing the pattern.

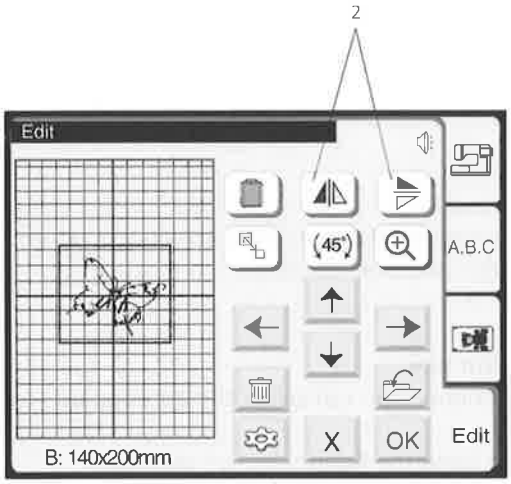

2 Mirror image key
Press the vertical mirror key to flip patterns from left to right.
Press the horizontal mirror key to flip the pattern from top to bottom.

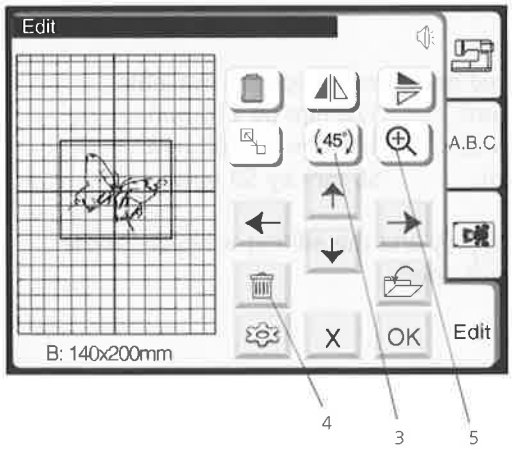

3 Rotate key
Press this key to rotate the pattern 45 degrees clockwise.

4 Delete key
Press this key to delete the selected pattern.

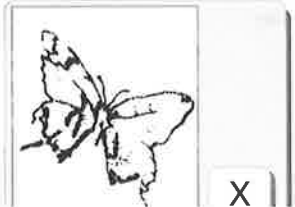

5 Magnifier key
Press this key to show a magnified image of the selected pattern.
Press the close X key to return to the previous screen.

Example: Combine the built-in design #3 and «Bear»

1. Select design #3 from the built-in designs.

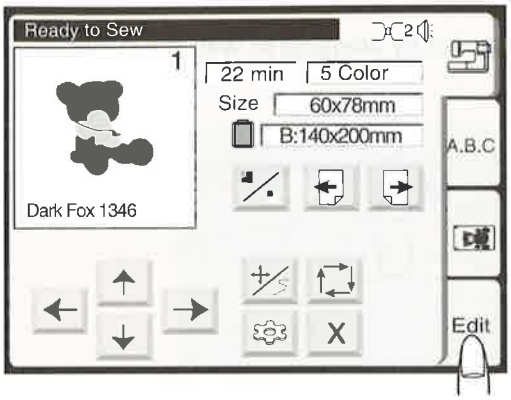

2. Press the Editing tab.

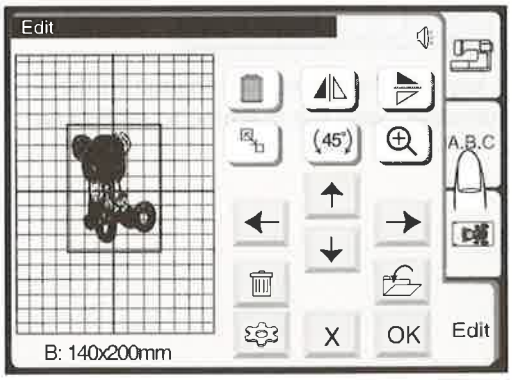

3. Press the Alphabet tab.

4. Select «B» (Upper case letter in Gothic style).

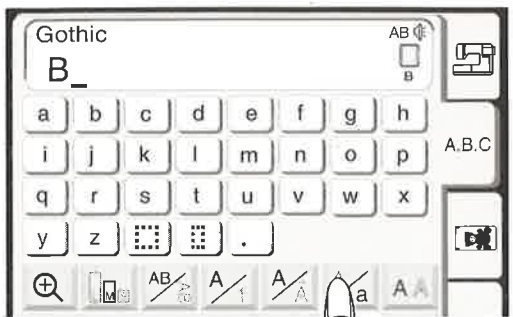

5. Press the letter case key to select lower case letters.

6. Select «**e**», «**a**» and «**r**».

7. Press the OK key.

8. Lay the design out by dragging or with the layout keys.

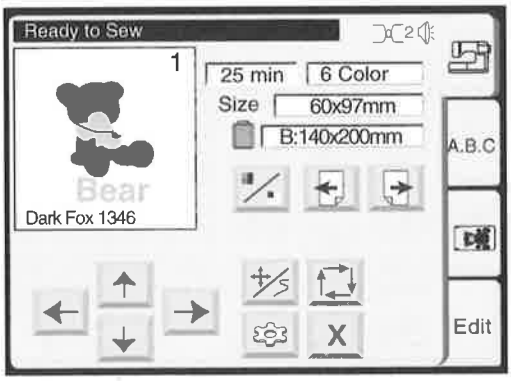

9. Press the ok key and the screen will change to the embroidery window. Start the machine to embroider.

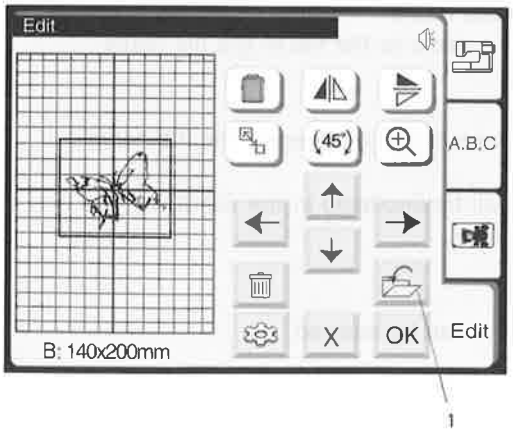

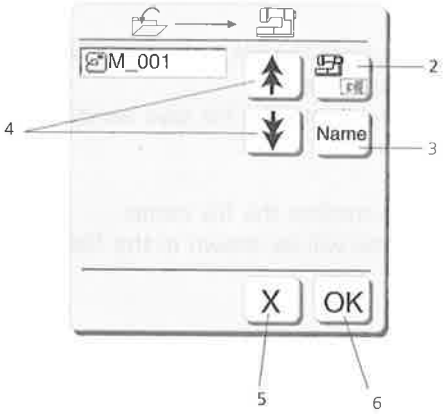

Save Embroidery Designs
From the editing window embroidery design can be stored at two different locations:

A. In the built-in memory area of the deco 330
B. on a ATA artista Personal Design Card

The built-in memory of the Deco 330 can hold a large number of your own embroidery design creations. Designs with a combined number of max. 290'000 stitches can be stored.

Caution:
It is recommended to make backup copies of important designs to a Personal Design Card. This will reduce the potential risk of data corruption.

1 Save file key
Press this key to save the edited design as a file.
The file save window will open.

Note:
The file names of formerly stored designs will be shown for your reference.

2 Built-in/card key
Press this key to toggle between built-in memory and a ATA Design Card to save the file.
Whichever location is selected will be highlighted bold on the key and will be shown in the header of the screen.

Note:
If no writeable Design Card is inserted, the Page, Name and OK - keys will be disabled

3 File name key
The file name will be automatically assigned, starting from M_001 in order.
Press this key to assign your own file name (refer to page 50 for more details).

4 Page keys
Press these keys to view the file list on the previous or next page.

5 Close key
If you do not wish to save the file, press this key to close the file save window.

6 OK key
Press this key to save the file and the screen will return to the previous window.

Caution:
Never turn the power off or eject the card when the warning sign or hourglass appears on the screen. Otherwise, data stored in the memory may be lost or damaged.

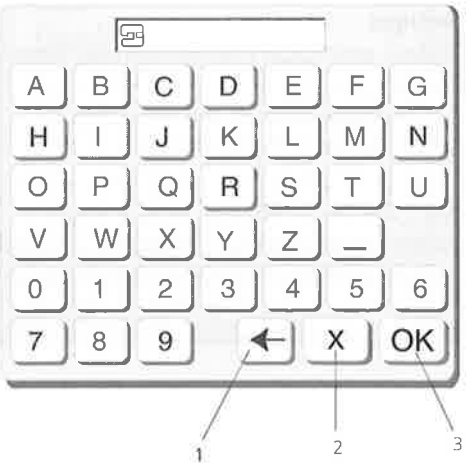

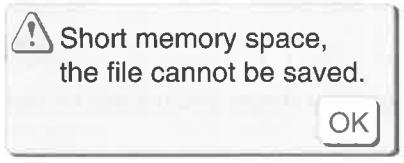

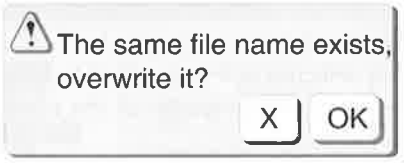

Assigning the file name
You can assign a name to the file in the file name window.

Press the file name Name key to open the file name window.
The keyboard will be displayed in the window.
Enter the file name.

Note:
Only 8 characters can be entered.

1 Back space key
If you need to correct the entry, press this key to delete the last character and enter a new character.

2 Close key
Press this key to close the file name window without assigning the file name.
The screen will return to the file save window.

3 OK key
Press this key to confirm the file name.
The new file name will be shown in the file save window.

Notes:
If the memory is full, the warning message will appear.
Press the OK OK key and go to the file open window then delete the file that you do not need to spare the memory space.
If the same name already exists, the warning message will appear.
Press the OK OK key to overwrite the existing file.
Press the close X key if you do not wish to overwrite it.
You need to change the file name before saving the file.

Your deco 330 can read all BERNINA design cards. Designs on BERNINA CD require artista Designer or OESD Explorations Software.

Almost every other card on the market and designs available on the internet can be read by converting them through optionally available PC Software and accessories.This includes older BERNINA deco 600/650 cards, for which you may want to use the Magic Box. Please contact your BERNINA dealer to show you all the possibilities.

Technical Note: For storing design files from the deco 330 on the ATA Personal Design Card a new file format, .EXP+, has been developed. It consists of two separate files using the same name, but different extensions. The file with the extension .EXP contains the stitch coordinates, while colour informations are stored in a file with the extension .INF. The deco 330 is prepared to read .EXP data only - obviously you may then have to define the colours yourself. These design files are stored on the ATA Personal Design Card in a subdirectory Emb5, which is automatically generated when a file is saved or the card is formatted.

Please refer to the table below for the possibilities each of the embroidery design storage media will give you and what is required to read them on the deco 330.

Original Design Media **Technical Data**	**# of Designs**	**Function on Deco 330**	**Comments / Restrictions / optional Equipment Required**
BERNINA Production Card PCMCIA, as used for artista 165-185 1MB, 8 bit linear flash EXP data with or without colour info	max. 100 (limited by Deco 330)	**Read**	- No colour information on some older cards available
BERNINA Personal Design Card PCMCIA, as used for artista 165-185 0.5MB, 8 bit linear flash EXP data without colour information	max. 15	**Read**	- No colour information
BERNINA ATA Personal Design Card PCMCIA, as used for artista 200 32MB, ATA (proprietary) .EXP and .EXP+	max. 100 (limited by Deco 330)	**Read / Write**	- Save as .EXP+ file to Emb5 subdirectory - Deco 330 cannot read .ART files written for artista 200!
artista 200 Design CD	n/a	**(Read)***	- convert with artista Designer or OESD Explorations on PC from .ART to .EXP+ - Desktop PC may require ATA PC Card Reader

Original Design Media Technical Data	# of Designs	Function on Deco 330	Comments / Restrictions / optional Equipment Required
Designs downloaded from Internet	n/a	**(Read)***	- Requires PC with Internet connection - Download files as .EXP (without colour information - Or download as .ART file and convert using artista Designer or OESD Explorations Software to .EXP+ on ATA PDC
Designs created by artista Designer or OESD's Explorations Software	n/a	**(Read)***	- Save to artista 200 Personal Design Card.
Magic Card/Amazing Card PCMCIA for BERNINA artista 0.5MB, 8 bit linear flash only .EXP	6	**Read**	- Saved as .EXP files - No colour information.

*Brackets show, that you need optional equipment to make the deco330 compatible to read these files.

Note :
Older versions of artista Designer and Explorations (before end of 2004) will require a S/W patch to be downloaded from Wilcom's website at www.wilcom.com.au

The Transfer of Embroidery Designs
The below graphic shows you different ways transferring embroidery designs to the Deco 330.

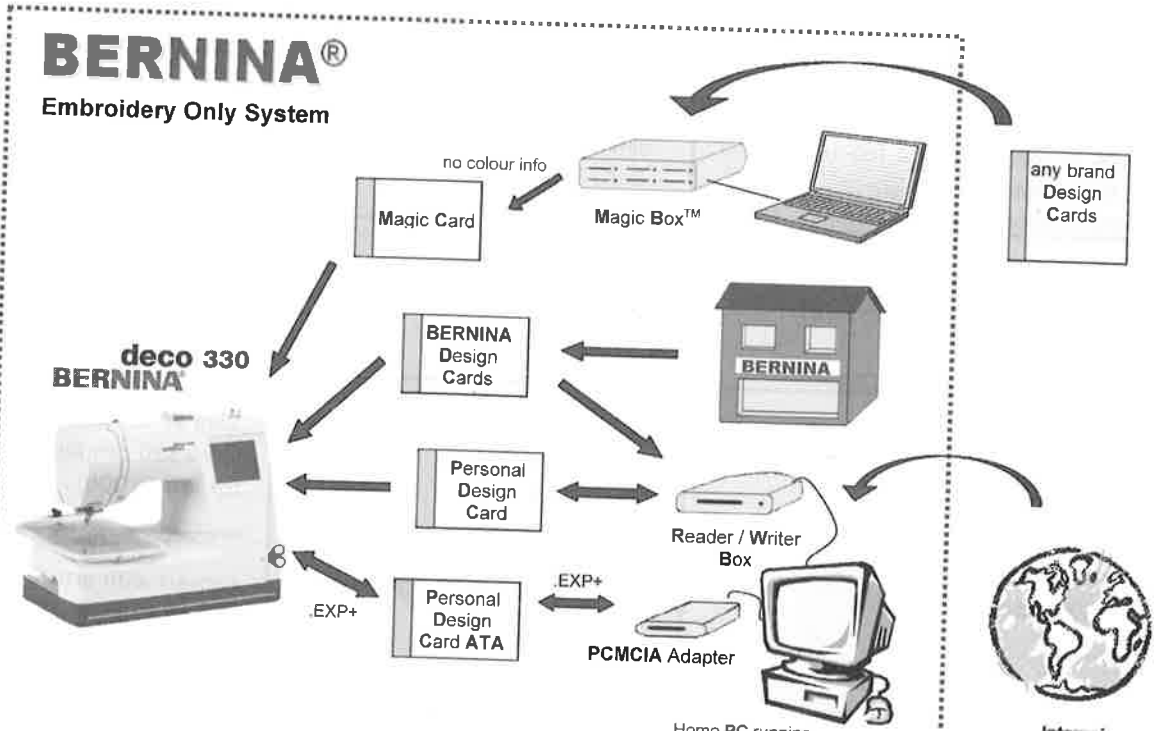

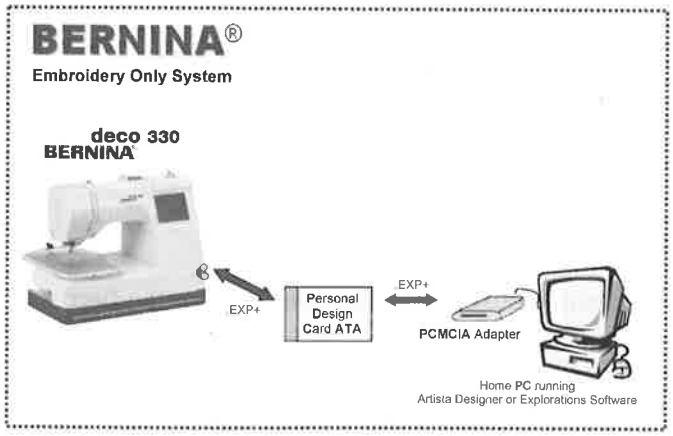

File Transfer with ATA Personal Design Card
Use the ATA Personal Design Card to store embroidery designs from the Deco 330.

These files may be stored on a PC and can be further processed with artista Designer or OESD Explorations Software.

A PCMCIA Card Reader is required when working with a desktop PC.

Embroidery designs created on the PC with artista Designer or OESD Exploratinons software can be transferred to the Deco 330 by the ATA Personal Design Card.

artista embroidery designs on the CD can be read on the PC and stored as .EXP+ files on the ATA Personal Design Card by using artista Designer or OESD Exploratinons software.

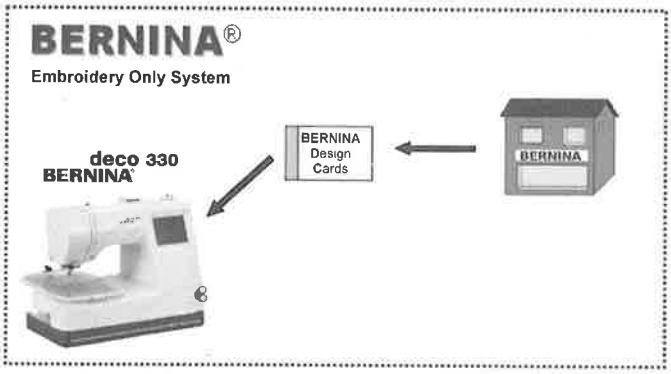

BERNINA Design Cards
Every BERNINA design card can be read directly by the Deco 330. Just plug them in and select the design in the Card Register in the Design Selection Window

Even older design cards bought for BERNINA artista sewing machine, are direct compatible (with the exception of the artista 200 CD)

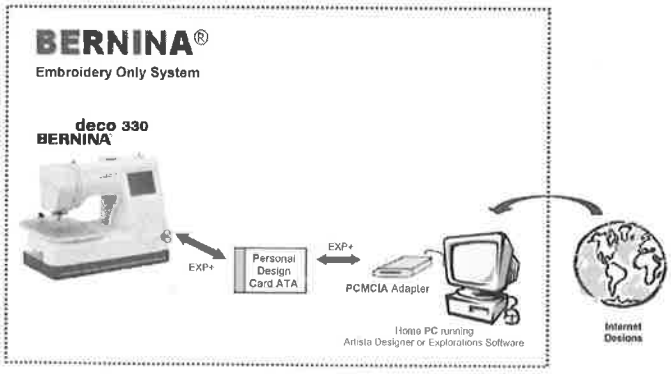

Embroidery Designs from the Internet
Embroidery designs from the Internet, i.e. from www.embroideryonline.com either

1. download as .ART file. Using artista Designer or OESD Explorations software write as .EXP+ file to ATA Personal Design Card

2. or download as .EXP file and copy with to an ATA Personal Design Card to the subdirectory "Emb5" - .EXP files do not carry colour info. Please print from the internet for your reference

Note:
If you don't use a Laptop PC you may require a BERNINA Card Reader.

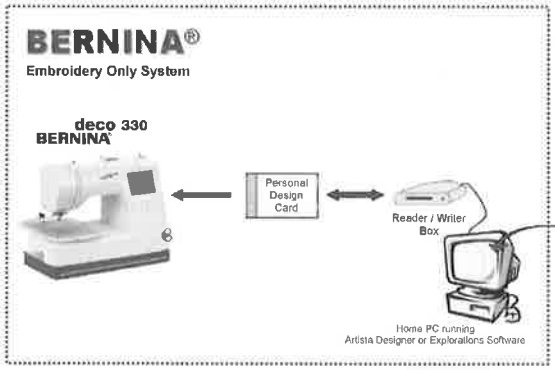

Personal Design Card (artista 165 / 185)
Existing embroidery designs as well as files downloaded from the internet may be transferred through the BERNINA Reader/Writer Box and a Personal Design Card to the Deco 330.

Note:
Limited functionality!
No colour information will be transferred to the Deco 330

Designs modified on the Deco 330 cannot be stored on the Personal Design Card for artista 165 / 185.

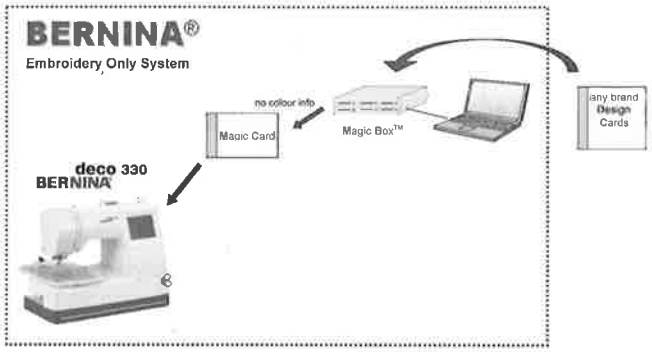

Read Other Brand Design Card
Design Cards of most other brands can be read by means of the OESD Magic Box™.

1. Read Card with Magic Box™
2. Write file to Magic Card for BERNINA artista
3. Read Magic Card into Deco 330

Note:
Limited functionality!
No colour information will be transferred to the Deco 330

Designs modified on the Deco 330 cannot be stored on the Personal Design Card for artista 165 / 185.

Important Note:
This overview only briefly describes the possible operations. Please refer to the documentation supplied with the respective products to learn more about their installation and use. This concerns mostly the artista Designer Software, the PC Card Reader, the Reader/Writer Box, the OESD Explorations Software as well as the OESD Magic Box™.

a

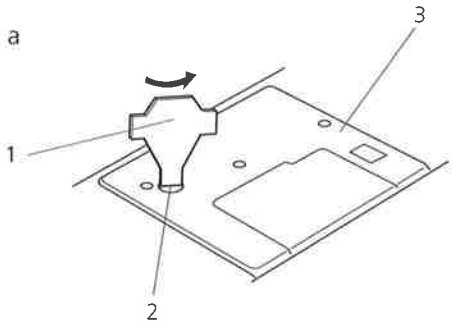

b

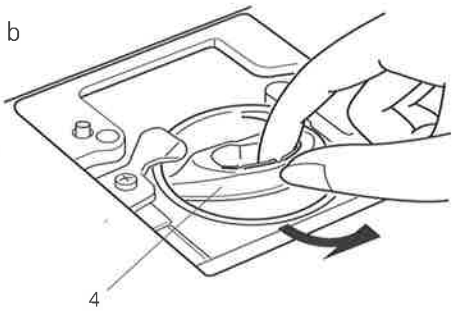

c

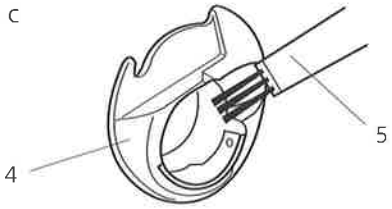

d

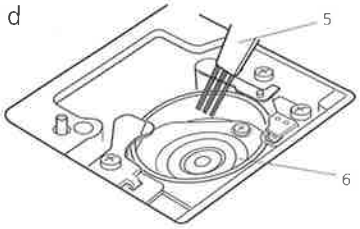

e

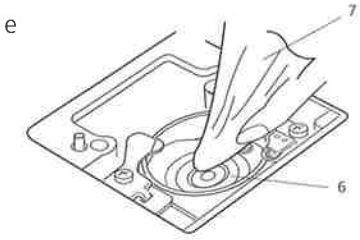

f

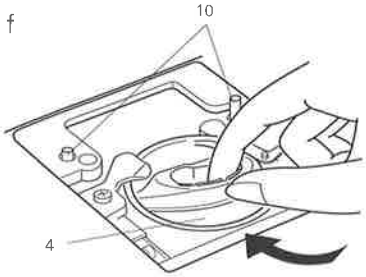

f

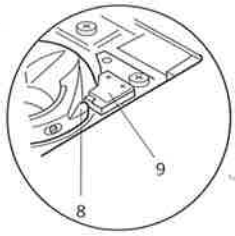

g

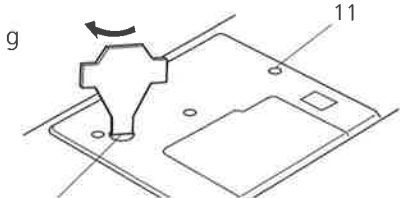

Cleaning the Hook Race and Feed Dog

Turn the handwheel to raise the needle, turn the power switch to 'O' and then unplug the embroidery computer.

Note:

Do not dismantle the machine other than what is explained in this section.

a Remove the setscrew with the screwdriver supplied with the machine. Remove the needle plate.

1 Screwdriver
2 Setscrew
3 Needle plate

b Lift up the bobbin holder and remove it.

4 Bobbin holder

c Clean the bobbin holder with a lint brush.

5 Lint brush

d Clean the hook race with the lint brush.

6 Hook race

e Clean the hook race with a dry cloth. (You may also use a vacuum cleaner.)

7 Soft dry cloth

f Insert the bobbin holder so that the knob fits next to the stopper in the hook race.

8 Knob
9 Stopper

g Re-attach the needle plate, aligning the needle plate guide pins with the guide holes on the needle plate and tighten the screw.

10 Needle plate guide pins
11 Needle plate guide holes

Note:

After cleaning the machine, make sure to replace the

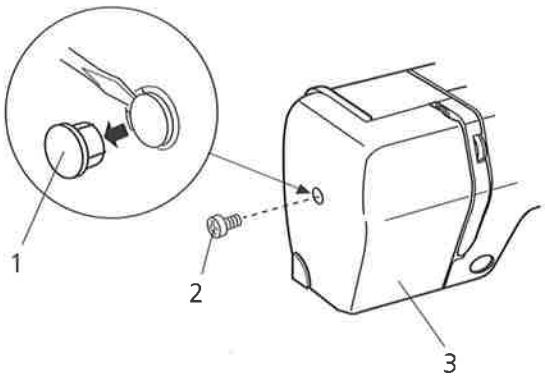

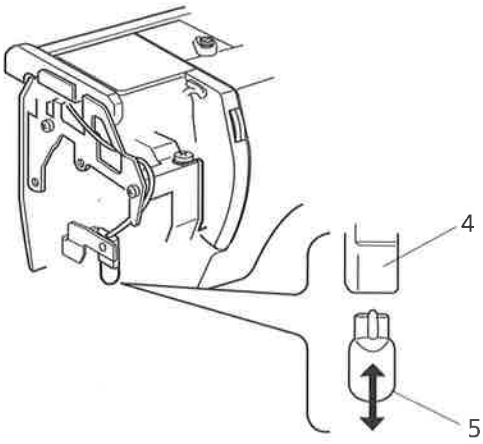

Replacing the Light Bulb

Warning:
Turn off the power and unplug the embroidery computer before replacing the light bulb.
The bulb could be HOT, wait until it has cooled down before touching it.

To remove:
Remove the cap and setscrew. Remove the faceplate. Pull out the bulb from the socket.

To replace:
Insert the bulb into the opening of the socket. Attach the faceplate with the setscrew, and attach the cap.

1 Cap
2 Setscrew
3 Faceplate
4 Lamp Socket
5 Light bulb

Problem	Cause	Reference
The machine is noisy.	1 Threads have been caught in the hook mechanism.	See page 55.
	2 Lint has collected in the bobbin holder.	See page 55.
The needle thread breaks	1 The needle thread is not threaded properly.	See pages 11, 12.
	2 The needle thread tension is too tight.	See page 15.
	3 The needle is bent or blunt.	See page 16, 22, 23
	4 The needle is inserted incorrectly.	See page 16.
	5 The needle thread is not set in the thread holder when starting the machine.	See page 14.
	6 Sewing speed is too high for the design being sewn.	See page 27
The bobbin thread breaks.	1 The bobbin thread is not threaded properly in the bobbin holder.	See page 10
	2 Lint has collected in the bobbin holder.	See page 55
	3 The bobbin is damaged and does not turn smoothly.	Replace the bobbin.
The needle breaks.	1 The needle is inserted incorrectly	See page 16.
	2 The needle is bent or blunt.	See page 16, 22, 23.
	3 The needle clamp screw is loose.	See page 16
	4 The needle thread tension is too tight.	See page 15
The screen display is not clear.	1 The screen contrast of the visual touch screen is not adjusted correctly.	See page 27
	2 The screen contrast has been faded due to a continuous use of the machine.	Adjust the screen contrast.
Skipped stitch	1 The needle is inserted incorrectly.	See page 16
	2 The needle is bent or blunt.	See page 16, 22, 23
	3 The needle thread is not threaded properly.	See pages 11, 12
	4 The defective needle (rusted, burred needle eye) is used.	Replace the needle.
	5 The embroidery hoop is not set properly.	See page 18
	6 The fabric is not tightly pulled on the embroidery hoop.	See page 17
	7 A stabilizer is not being used.	Use a stabilizer.
The machine does not run.	1 A thread is caught in the hook race.	See page 55
	2 The control circuit is not working correctly.	Turn the switch off and turn it on again.
Abnormal noise when turning the machine on	1 Something is caught between the carriage and the arm.	Remove the object.
	2 The carriage is bumping into something around the machine.	See page 18
Patterns distorted	1 The fabric is not pulled tightly on the embroidery hoop.	See page 17
	2 The embroider hoop is not fixed securely.	See page 18
	3 The carriage is bumping into something around the machine.	See page 18
	4 The fabric is caught or pulled for some reason when embroidering.	Stop the machine and free the fabric.
	5 The needle thread tension is too tight.	See page 15
	6 A stabilizer is not used.	Use a stabilizer.
	7 The needle thread on the wrong side of fabric is not cut correctly.	Cut extra needle thread on the wrong side.
Function keys do not work properly.	1 Key position is not adjusted properly.	See page 27
	2 The control circuit is not working correctly.	Turn the switch off and turn it on again.

Index

A

Adjust User Preferences / Setup 26
Assigning the file name 50
Attaching the Embroidery Hoop to the Machine 18

B

Bobbin Threads 21

C

Care and Maintenance 55
Change Needle 16
Checking the Needle Condition 23
Cleaning the Hook Race and Feed Dog 55
Connecting the Power Supply 7
Contents 3

D

Deleting a letter 42
Design Cards and Compatibility 51
Detachable Extension Table 6
Drawing up the Bobbin Thread 14

E

Editing and Combining Designs 43
Editing Mode 43
Editing screen 43
Editing the Monogram 42
Ejecting the card 25
Embroidery 34
Embroidery Computer Overview 4
Embroidery Hoop 20
Embroidery Threads 21
Embroidery Window 34
Extra spool pin 8

F

Foreword 2
Formatting the memory 28
Function keys 45
Function Keys 24

G

Getting Ready to Embroider 7

I

Important Embroidery Information 19
IMPORTANT SAFETY INSTRUCTIONS 1
Inserting a letter 42
Inserting and Removing of a Design Card 25
Inserting the bobbin 10

K

Key Operations 24

L

Language Selection 29
Lettering 38

M

Moving the selected pattern 44

N

Name of Parts 4
Needle Summary 22
Needle Threader 13
Needle, Thread and Fabric 22
Needle / Thread Combination 22

O

On-screen Help 30
Open Built-In designs and from Design Cards 32
Open file key 33

P

Pattern Selection Window 31
Personal Design Card (Optional accessory) 25
Programming Lettering 39

R

Raising the Presser Foot 11
Removing the bobbin 8
Replacing the Light Bulb 56

S

Save Embroidery Designs 49
Screen Information 34
Selecting the pattern to edit 44
Selecting the Starting Point 39
Stabilizer 19
Standard accessories 5
Start/ Stop Button 7
Starting to embroider 36, 40

T

Templates 20
The Transfer of Embroidery Designs 52
Thread Tension 15
Threading the Machine 11
Troubleshooting 57

W

Winding the bobbin 9

2 Letters Monogram 41

EN 502060.00.12
854804003